CROMSTEEL®

钢士达

线性自动化机械零部件

综合商品型录

型录 C 08-02

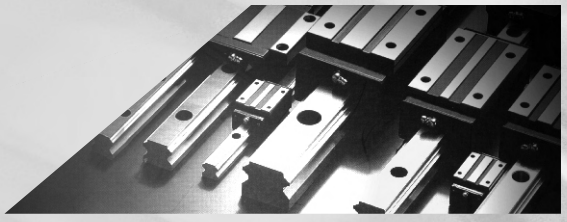

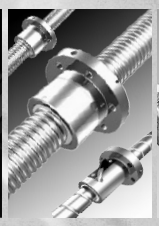

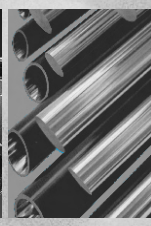

专业·可靠

CROMSTEEL®

钢士达

线性自动化机械零部件

综合商品型录


W..

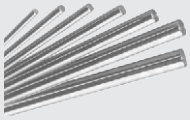
WV..


WRA..


WHV..

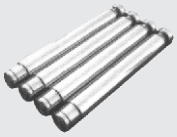
BATC..


BAC..


SK..


LM..


LM..L


LMF..


LMF-L


LMK..


SMA..


SMA-L


SME..


SME-L

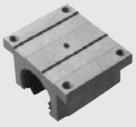
TBR..


SB..


SFNU/SFU


OFU/DFU


SFNI/SFI


OFI / DFI


SFV..


OFV / DFV..


BSHR


BK..


BF..

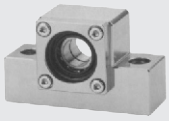
EK..

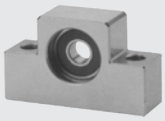
EF..


WBK..


MC..

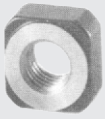
RN..


TAC..


TAB..

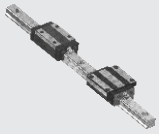
BG..

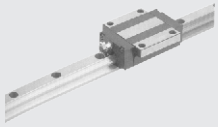
HGH..

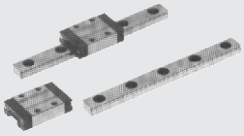
MR-MN..

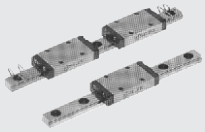
MR-ML..

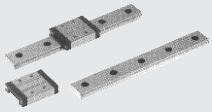
MR-WN..

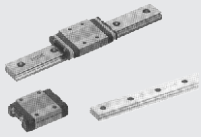
MR-WL..


VR..

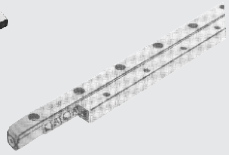
GV..


R..

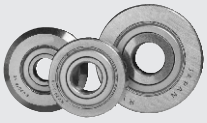
RV..


RM..


BNM..


BNF..


RBI..

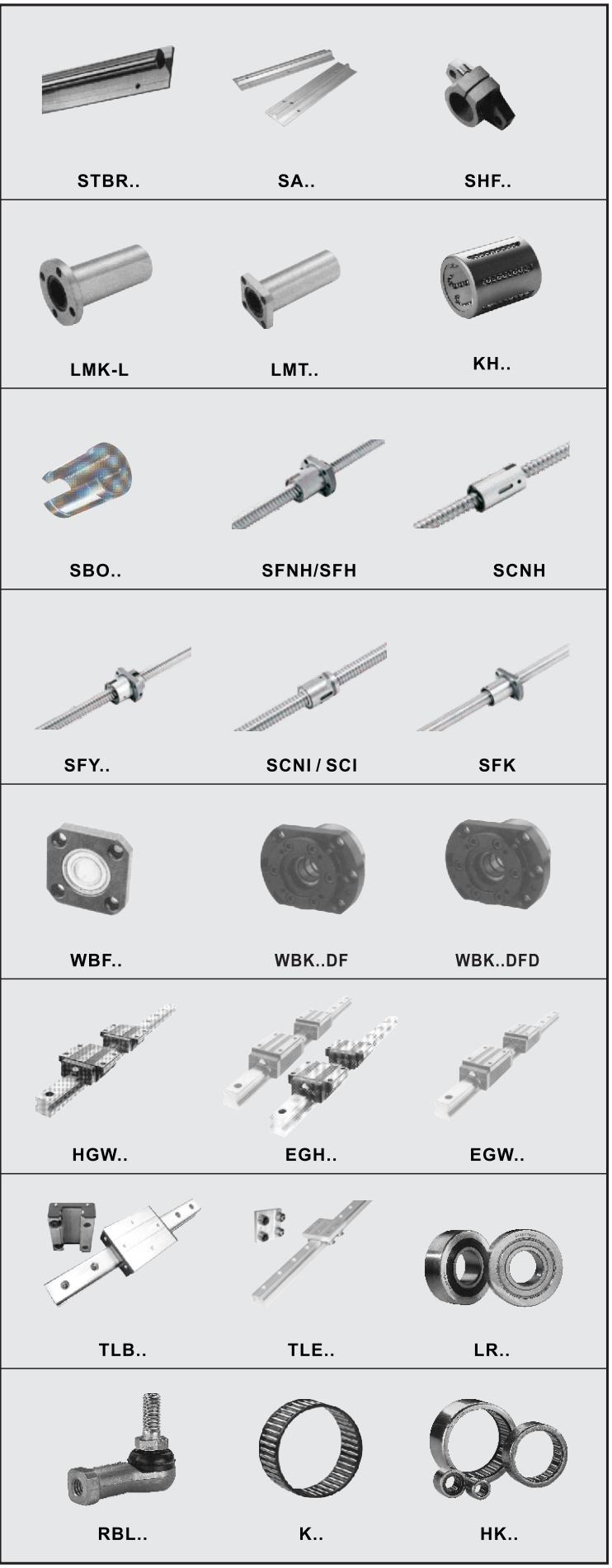

CROMSTEEL® **钢士达**是一个国际性制造及销售组织。专注于线性自动化机械零配件的业务活动。主要产品包括直线钢轴、直线轴承、滚珠螺杆、螺杆支撑座、直线导轨、微型直线导轨、交叉滚子导轨、高速导轨及其它轴承产品。*CROMSTEEL* 不仅在世界各地提供线性轴承产品，亦提供广泛的技术咨询服务。

CROMSTEEL
钢士达

型录 C 20-11

PART A

Linear Shaft
直线钢轴

直线钢轴技术指标

品质项目	WV 20	BATC 20	BAC 20
表面硬度	60-64HRC	56±2HRC	900-1100HV01
硬化深度	1.2~1.5mm	0.4~4mm	20μm
外径公差	g6	f7-h7	f7-h7
圆　　度	0.006mm	(IT7)/2	(IT7)/2
直 线 度	0.1mm/m	-	-

直线钢轴可配套直线轴承、滚轮轴承及自润滑轴承使用。

*更详尽的技术指标参见: A01-A11。

W.. Series

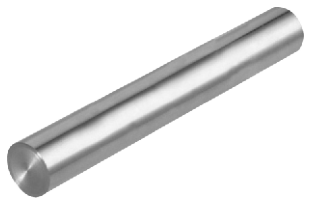

A-01

WV.. Series

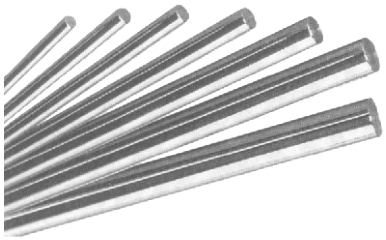

A-02

WRA.. Series

A-03

WHV.. Series

A-04

BATC.. Series

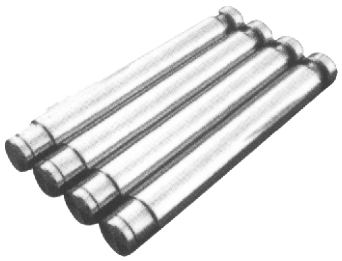

A-05

BAC.. Series

A-06

STBR.. Series

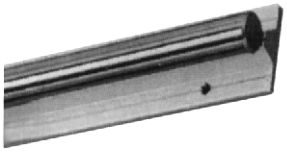

A-07

SA.. Series

A-08

SHF. . Series

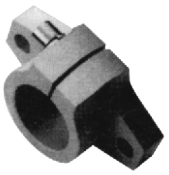

A-10

SK.. Series

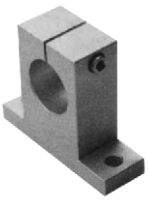

A-11

PART B

Linear Bearing
直线轴承

直线轴承的分类说明

标准直线轴承	标准型	圆法兰型
带座直线轴承	间隙调整型	方法兰型
超级直线轴承	开口型	中间法兰型

*更详尽的技术指标参见: B01-B14。

LM.. Series	LM-L Series	LMF.. Series
		
B-01	B-02	B-03

LMF-L Series	LMK.. Series	LMK-L Series
		
B-04	B-05	B-06

LMT.. Series	KH.. Series	SMA.. Series
		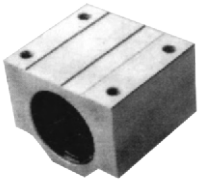
B-07	B-08	B-09

SMA-L Series	TBR.. Series	SME.. Series
	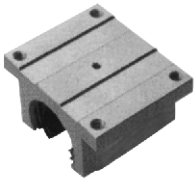	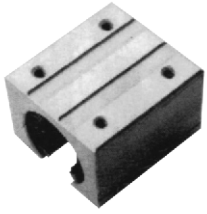
B-10	B-11	B-12

SME-L Series	SB. . Series	SBO. . Series
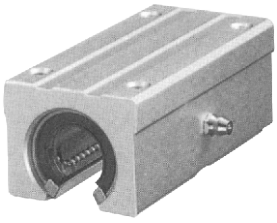		
B-13	B-14	B-15

PART C

Ball Screw
滚珠螺杆

滚珠螺杆的编号说明

螺杆外径；导程；长度；
螺帽型号；珠卷数；
螺帽法兰型式；
制程代号: (研磨/转造)；
精度等级；轴向间隙预压；

*更详尽的技术指标参见: C01-C17。

SFNH / SFH.. Series	SFA.. Series	SCNH.. Series
		
C-01	C-02	C-03

PART D

Ballscrews Support
螺杆支撑座

滚珠螺杆的固边零配件

螺杆支撑座：

固定侧：角型，BK/EK 型；

圆型，WBK 型；

支撑侧：角型，BF/EF 型；

圆型，WBF 型。

螺母支座、锁紧螺母需向钢士达工程部查询。

*更详尽的技术指标参见: D01-D16。

BK.. Series	BF.. Series	EK.. Series
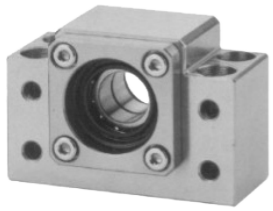 D-03	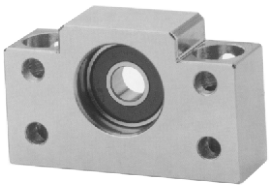 D-04	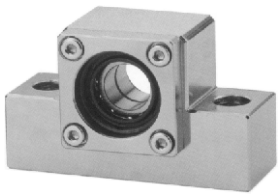 D-05

EF.. Series	WBK.. Series	WBF.. Series
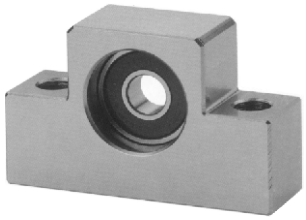 D-06	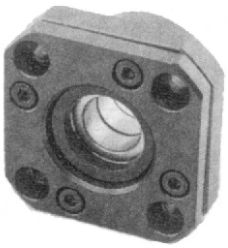 D-07	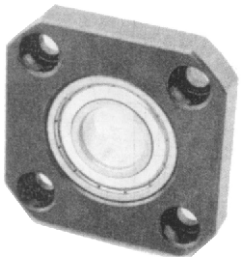 D-08

WBK-DF Series	WBK-DFD Series	MC.. Series
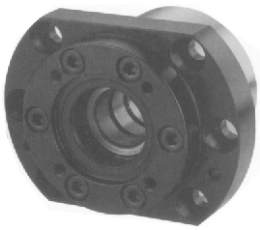 D-09	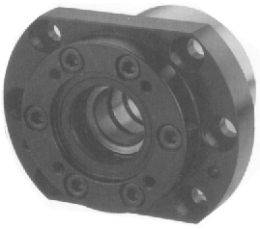 D-10	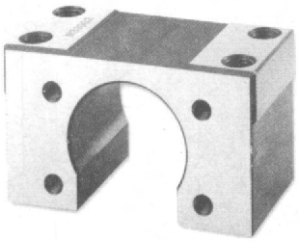 D-11

PART E

Linear Guideway
直线导轨

直线导轨的编号说明

滑轨型式：高组装/低组装。

尺寸编号：15,20,25,30,35,45,55,65。

滑块型式：方　型：紧凑型，标准型，加长型；
　　法兰型：紧凑型，标准型，加长型。

滑块数；滑轨长度；精度等级。

*更详尽的技术指标参见：E01-E31。

PART F

Mini Guideway
微型不锈钢导轨

微型不锈钢导轨的技术说明

1、尺寸规格小，标准型 MR-MN 系列导轨宽度 W1：3-15mm (直线导轨 W1 在15mm 以上)；

2、材质是不锈钢经淬透热处理(包括滑轨、滑座钢体及滚珠)。

*更详尽的技术指标参见: F01-F04。

MR-MN.. Series	MR-ML.. Series	MR-WN.. Series	MR-WL.. Series
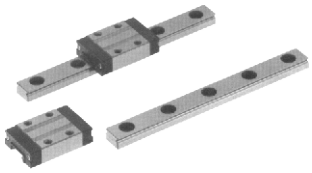 F-01	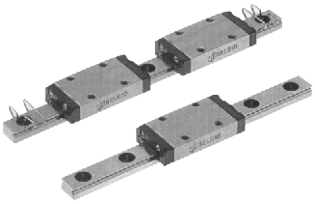 F-02	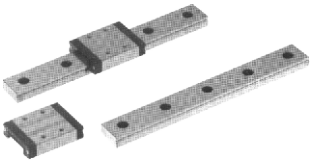 F-03	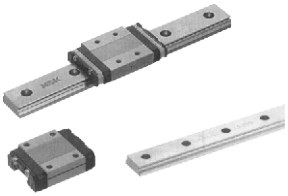 F-04

PART G

GV Guideway
交叉滚子导轨

高速导轨的技术说明

特点：摩擦阻力低；
稳定性好；
接触面积大；
弹性变形小；
应用：高刚性、高负荷运动。

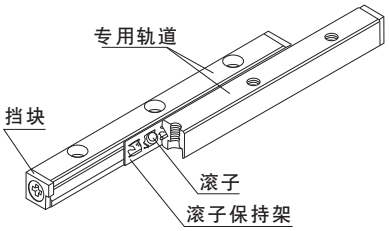

*更详尽的技术指标参见: G01-G07。

VR.. Series	GV.. Series
 G-01	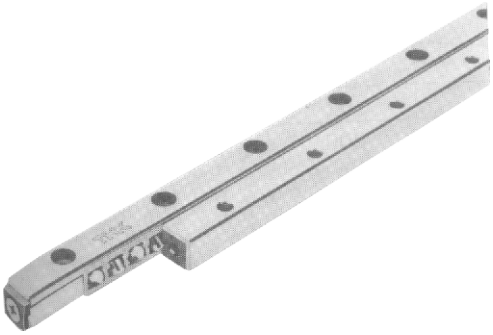 G-06

PART H

TL Guideway
高速导轨

高速导轨的技术说明

1、高速静音；
2、组装及互换性佳；
3、可承受较轻的负荷；
4、特别适用于：高速印刷、打印、喷绘、半导体行业等高速机械运动设备上。

*更详尽的技术指标参见: H01-H04。

TLB.. Series	TLE.. Series
 H-01	 H-04

PART I

Track Roller Bearing
滚轮轴承

*更详尽的技术指标参见: I01 - I10。

PART J

Rod End
杆端轴承

*更详尽的技术指标参见: J01 - J10。

PART K

Other
其它产品

滚针轴承

带座轴承

*更详尽的型号目录参见: K01 - K02。

PART A

直线钢轴

Linear Shaft

CROMSTEEL

产品项目
Products item

W 系列	Ck55 直线硬钢轴 （hardened linear shafts)
WV 系列	Ck55 镀铬直线硬钢轴 (hardened and chrome plated linear shafts)
WRA 系列	X90CrMoV18 不锈钢直线硬钢轴 (hardened stainless steel shafts)
WRB 系列	X46Cr13 不锈钢直线硬钢轴 （hardened stainless steel linear shafts)
可定做各种成型直线钢轴，并可提供空心镀铬和不镀铬直线钢管及球丝杆钢轴等产品 By request custom machining	

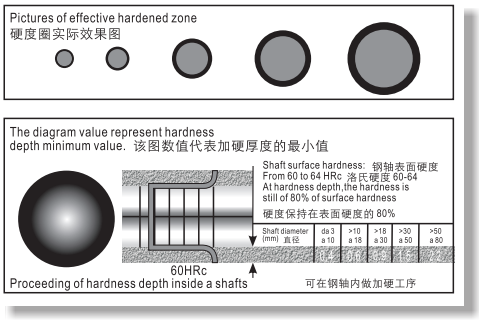

W: Ck55 直线硬钢轴
W: Ck55 HARDENED LINEAR SHAFTS

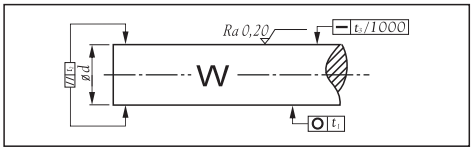

Shraft Code Number	Weight Per Meter Length	Shaft Diameter D	Standard Length	Standard Depth Rht DIN6773	Tolerance ISO g6	Round ness （Cylindric） tl	Parallelism （Cylindric） t2	Straight ness t3
编号	千克/米 Kg/m	钢轴直径 mm	标 准长 度 mm	标准深度 mm	公差 μm	圆度 μm	平行度 μm	直线度 mm/m
W 3	0.055	3	1000	0.4-0.6	-2-8	3	4	0.16
W 4	0.11	4	2000	0.5-0.8	-2-8	3	4	0.16
W 5	0.16	5	2000	0.5-0.8	-4-12	4	6	0.16
W 6	0.23	6	2000	0.5-0.8	-4-12	4	6	0.16
W 8	0.40	8	2000	0.6-0.9	-5-14	4	6	0.16
W 10	0.62	10	2000	0.7-1.0	-5-14	4	6	0.12
W 12	0.89	12	2000	0.8-1.2	-6-17	5	8	0.12
W 13	1.04	13	2000	0.8-1.2	-6-17	5	8	0.12
W 15	1.39	15	2000	1.0-1.4	-6-17	5	8	0.12
W 16	1.58	16	3000	1.1-1.5	-6-17	5	8	0.1
W 20	2.47	20	3000	1.2-1.5	-7-20	6	8	0.1
W 25	3.85	25	3000	1.5-1.7	-7-20	6	9	0.1
W 30	5.55	30	3000	1.5-1.9	-7-20	6	9	0.1
W 35	7.55	35	3000	1.8-1.9	-9-25	7	11	0.1
W 40	9.87	40	3000	1.6-2.0	-9-25	7	11	0.1
W 50	15.40	50	3000	2.2-2.6	-9-25	7	11	0.1
W 60	22.20	60	3000	2.2-2.6	-10-29	8	13	0.1
W 80	39.50	80	3000	2.2-2.6	-10-29	8	13	0.1

根据客户要求我们可提供列表中没有列出特殊长度和精度的钢轴

By request we can supply shaft diameter in no listed dimensions with special length and tolerance.

直径为 16 毫米以上，最大长度为 5800 毫米

Max available length 5800 mm up to diameter 16 mm.

表面硬度： 60-64 HRC

Surface hardness:60-64 HRC

各国钢材牌号标准对照

Steel grade correspondents

DIN	Werkstoff	STAS	AFNOR	B.S. 英国标准	UNI	JIS 日本标准	GOST	AISI 美国标准
Ck55	1.1203	OLC55X	2C55	060A57	C55	S55C	55	1055
X46Cr13	1.4034	40Cr130	Z44Cr13	420S45	X40Cr14	-	40Cr13	
X90CrMoV18	1.4112	90VMoCr180	-	-	-	-	-	440B
100Cr6	1.3505	Rul 1	100Cr6	5354H99	100Cr6	SUJ2	SH15	52100

WV：Ck55直线镀铬硬钢轴

WV：Ck55 HARDENED AND HARD CHROME PLATED LINEAR SHAFTS

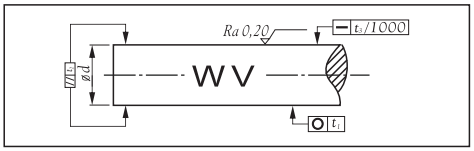

Shraft Code Number 编号	Weight Per Meter Length 千克/米 Kg/m	Shaft Diameter D 钢轴直径 mm	Standard Length 标准长度 mm	Standard Depth Rht DIN6773 标准深度 mm	Tolerance ISO g6 公差 μm	Round ness (Cylindric) tl 圆度 μm	Parallelism (Cylindric) t2 平行度 μm	Straight ness t3 直线度 mm/m
WV 3	0.055	3	1000	0.4-0.6	-2-8	6	10	0.16
WV 4	0.10	4	2000	0.5-0.8	-2-8	6	10	0.16
WV 5	0.16	5	2000	0.5-0.8	-4-12	6	10	0.16
WV 6	0.23	6	2000	0.5-0.8	-4-12	6	10	0.16
WV 8	0.40	8	2000	0.6-0.9	-5-14	6	10	0.16
WV 10	0.62	10	2000	0.7-1.0	-5-14	6	10	0.12
WV 12	0.89	12	2000	0.8-1.2	-6-17	8	12	0.12
WV 13	1.04	13	2000	0.8-1.2	-6-17	8	12	0.12
WV 15	1.39	15	2000	1.0-1.4	-6-17	8	12	0.12
WV 16	1.58	16	3000	1.1-1.5	-6-17	8	12	0.1
WV 20	2.47	20	3000	1.2-1.5	-7-20	9	12	0.1
WV 25	3.85	25	3000	1.5-1.7	-7-20	9	12	0.1
WV 30	5.55	30	3000	1.5-1.9	-7-20	9	12	0.1
WV 35	7.55	35	3000	1.5-1.9	-9-25	11	15	0.1
WV 40	9.87	40	3000	1.6-2.0	-9-25	11	15	0.1
WV 50	15.40	50	3000	2.2-2.6	-9-25	11	15	0.1
WV 60	22.20	60	3000	2.2-2.6	-10-29	12	15	0.1
WV 80	39.50	80	3000	2.2-2.6	-10-29	12	15	0.1

根据客户要求我们可提供列表中没有列出的特殊长度和精度钢轴

By request we can supply shaft diameter in no listed dimensions with special length and tolerance.

镀铬厚度：5-12 μm

Chrome thickness: 5-12 μm

铬层硬度：900-1100HV0.1

Chrome layer hardness=900-1100 HV 0.1

直径为16毫米以上，最大长度为5800毫米,标准公差为g6.

By request for diameter up to 16 mm we can offer max length 5800 mm.
For :standard tolerance ISO g6

CROMSTEEL

WRA: X90CrMoV18 不锈钢钢轴

INDUCTION HARDENED STAINLESS STEEL LINEAR SHAFTS

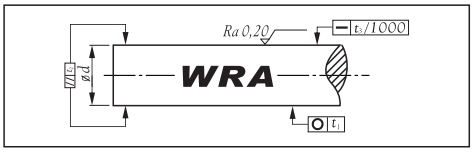

Shraft Code Number	Weight Per Meter Length	Shaft Diameter d	Standard Length	Hardening depth DIN 50190 (max)	Standard tolerance ISO h7	Round ness (Cylindric) tl	Parallelism (Cylindric) t2	Straight ness t3
编号	千克/米 Kg/m	钢轴直径 mm	标准长度 mm	标准深度 mm	公差 μm	圆度 μm	平行度 μm	直线度 mm/m
WAR 5	0.16	5	2000	0.5-0.8	0-12	4	5	0.16
WAR 6	0.23	6	2000	0.5-0.8	0-12	4	6	0.16
WRA 8	0.4	8	2000	0.6-0.9	0-15	4	6	0.16
WRA 10	0.62	10	2000	0.7-1.0	0-15	4	6	0.16
WRA 12	0.89	12	2000	0.8-1.2	0-18	5	8	0.12
WRA 13	1.04	13	2000	0.8-1.2	0-18	5	8	0.12
WRA 15	1.39	15	2000	1.1-1.5	0-18	5	8	0.12
WRA 16	1.58	16	3000	1.1-1.5	0-18	5	8	0.12
WRA 20	2.47	20	3000	1.2-1.6	0-21	6	9	0.1
WRA 25	3.85	25	3000	1.5-1.7	0-21	6	9	0.1
WRA 30	5.55	30	3000	1.5-1.9	0-21	6	9	0.1
WRA 40	9.87	40	3000	2.5-3.0	0-25	7	11	0.1
WRA 50	15.4	50	3000	2.7-3.2	0-25	7	11	0.1
WRA 60	22.2	60	3000	2.9-3.3	0-30	8	13	0.1

根据客户要求我们可提供列表中没有列出特殊长度和精度的钢轴

By request we can supply shaft diameters in no listed dimensions, with special lengths and tolerances.

直径为16毫米以上，最大长度为5800毫米,标准公差为h7.

By request for diameter up to 16 mm we can offer max length 5800 mm.
For :standard tolerance ISO h7

表面硬度： 55 HRC

Surface hardness min: 55 HRC

※ 上述内径尺寸由于原材料批次原因，请问询后再作理解处理.

CROMSTEEL

WHV：Ck55 镀铬空心轴

INDUCTION HARDENED & CHROMED HOLLOW LINEAR SHAFTS

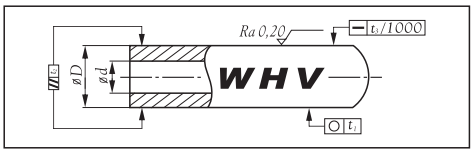

Shraft Code Number	Weight Per Meter Length	Shaft Diameter outer D	inner d	Standard Length	Standard Depth Rht DIN6773	Standard tolerance ISO h7	Round ness （Cylindric） tl	Parallelism （Cylindric） t2	Straight ness t3
编号	千克/米 Kg/m	外径 mm	内径 mm	标准长度 mm	标准深度 mm	公差 μm	圆度 μm	平行度 μm	直线度 mm/m
WHV 12	0.66	12	6	3000	0.6-1.3	0-18	8	12	0.12
WHV 14	0.91	14	7	3000	0.6-1.3	0-18	8	12	0.12
WHV 16	1.28	16	8	3000	0.6-1.6	0-18	8	12	0.12
WHV 20	1.25	20	14	3000	0.9-1.6	0-21	9	12	0.1
WHV 25	2.35	25	15.6	3000	0.9-1.8	0-21	9	12	0.1
WHV 30	3.5	30	18.3	3000	1.9-2.0	0-21	9	12	0.1
WHV 40	4.99	40	28	3000	1.5-2.5	0-25	11	15	0.1
WHV 50	9.91	50	29.7	3000	1.5-2.5	0-25	11	15	0.1
WHV 60	14.2	60	36	3000	2.2-3.0	0-30	12	15	0.1
WHV 80	19.43	80	57	3000	2.2-3.0	0-30	12	15	0.1
WHV 90	27.73	90	60	3000	2.5-3.0	0-35	14	17	0.2
WHV 100	35.61	100	65	3000	2.5-3.3	0-35	14	17	0.2

根据客户要求我们可提供列表中没有列出的特殊长度和精度钢轴

By request we can supply shaft diameter is no listed dimensions with special length and tolerance.

直径为16毫米以上，最大长度为5800毫米,标准公差为h7.

By request for diameter up to 16 mm we can offer max length 5800 mm.
For :standard tolerance ISO h7

镀铬厚度：5-12 μm

Chrome thickness: 5-12 μm

铬层硬度：900-1100 HV 0.1

Chrome layer hardness = 900-1100 HV 0.1

BATC： Ck45 高频镀铬精密传动轴

INDUCTION HARDENED AND HARD CHROME PLATED STEEL BARS

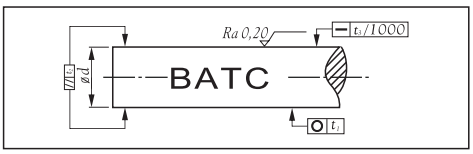

Shraft Code Number	Weight Per Meter Length	Shaft Diameter D	Standard Length	Hardening depth DIN 50190 (max)	Standard tolerance ISO g6	Round ness （Cylindric） tl	Parallelism （Cylindric） t2	Straight ness t3
编号	千克/米 Kg/m	钢轴直径 mm	标准长度 mm	标准深度 mm	公差 μm	圆度 μm	平行度 μm	直线度 mm/m
BATC 6	0.23	6	2000	0.5-0.8	-4-12	4	6	0.16
BATC 8	0.40	8	2000	0.6-0.9	-5-14	4	6	0.16
BATC 10	0.62	10	2000	0.7-1.0	-5-14	4	6	0.12
BATC 12	0.89	12	2000	0.8-1.2	-6-17	5	8	0.12
BATC 13	1.04	13	2000	0.8-1.2	-6-17	5	8	0.12
BATC 15	1.39	15	2000	1.0-1.4	-6-17	5	8	0.12
BATC 16	1.58	16	3000	1.1-1.5	-6-17	5	8	0.1
BATC 18	2.00	18	3000	1.1-1.5	-6-17	5	8	0.1
BATC 20	2.47	20	3000	1.2-1.5	-7-20	6	8	0.1
BATC 22	2.98	22	3000	1.2-1.5	-7-20	6	8	0.1
BATC 24	3.55	24	3000	1.4-1.6	-7-20	6	8	0.1
BATC 25	3.85	25	3000	1.5-1.7	-7-20	6	9	0.1
BATC 28	4.83	28	3000	1.5-1.8	-7-20	6	9	0.1
BATC 30	5.55	30	3000	1.5-1.9	-7-20	6	9	0.1
BATC 32	6.31	32	3000	1.5-1.9	-9-25	7	11	0.1
BATC 35	7.55	35	3000	1.5-1.9	-9-25	7	11	0.1
BATC 40	9.87	40	3000	1.6-2.0	-9-25	7	11	0.1
BATC 45	12.50	45	3000	1.6-2.0	-9-25	7	11	0.1
BATC 50	15.40	50	3000	2.2-2.6	-9-25	7	11	0.1
BATC 55	18.64	55	3000	2.2-2.6	-10-29	8	13	0.1
BATC 60	22.20	60	3000	2.2-2.6	-10-29	8	13	0.1
BATC 70	30.20	70	3000	2.2-2.6	-10-29	8	13	0.1
BATC 75	34.70	75	3000	2.2-2.6	-10-29	8	13	0.1
BATC 80	39.50	80	3000	2.2-2.6	-10-29	8	13	0.1

根据客户要求我们可提供列表中没有列出的特殊长度和精度钢轴

By request we can supply shaft diameter is no listed dimensions with special length and tolerance.

直径为16毫米以上，最大长度为5800毫米

Max available length 5800 mm up to diameter 16 mm.

铬层硬度：900-1100HV0.1

Chrome layer hardness = 900-1100 HV 01

表面硬度： 56+/-2 HRC 或按客户要求

Surface hardness min: 56+/-2 HRC or by request

铬层厚度：15-20 μm

Chrome thickness: 15-20 μm

BAC： Ck45 镀铬精密传动轴

PRECISION HARD CHROME PLATED STANDARD SHAFTS

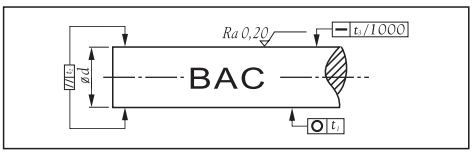

Shraft Code Number	Weight Per Meter Length	Shaft Diameter D	Standard Length	Standard tolerance ISO g6	Round ness （Cylindric） tl	Parallelism （Cylindric） t2	Straight ness t3
编号	千克/米 Kg/m	钢轴直径 mm	标准长度 mm	公差 μm	圆度 μm	平行度 μm	直线度 mm/m
BAC 6	0.23	6	2000	-4, -12	4	6	0.16
BAC 8	0.40	8	2000	-5, -14	4	6	0.16
BAC 10	0.62	10	2000	-5, -14	4	6	0.12
BAC 12	0.89	12	2000	-6, -17	5	8	0.12
BAC 13	1.04	13	2000	-6, -17	5	8	0.12
BAC 14	1.21	14	2000	-6, -17	5	8	0.12
BAC 15	1.39	15	2000	-6, -17	5	8	0.12
BAC 16	1.58	16	3000	-6, -17	5	8	0.1
BAC 18	2.00	18	3000	-6, -17	5	8	0.1
BAC 20	2.47	20	3000	-7, -20	6	8	0.1
BAC 22	2.98	22	3000	-7, -20	6	8	0.1
BAC 24	3.55	24	3000	-7, -20	6	8	0.1
BAC 25	3.85	25	3000	-7, -20	6	9	0.1
BAC 28	4.83	28	3000	-7, -20	6	9	0.1
BAC 30	5.55	30	3000	-7, -20	6	9	0.1
BAC 32	6.31	32	3000	-9, -25	7	11	0.1
BAC 35	7.55	35	3000	-9, -25	7	11	0.1
BAC 40	9.87	40	3000	-9, -25	7	11	0.1
BAC 45	12.50	45	3000	-9, -25	7	11	0.1
BAC 50	15.40	50	3000	-9, -25	7	11	0.1
BAC 55	18.64	55	3000	-10, -29	8	13	0.1
BAC 60	22.20	60	3000	-10, -29	8	13	0.1
BAC 70	30.20	70	3000	-10, -29	8	13	0.1
BAC 75	34.70	75	3000	-10, -29	8	13	0.1
BAC 80	39.50	80	3000	-10, -29	8	13	0.1

根据客户要求我们可提供列表中没有列出的特殊长度和精度钢轴

By request we can supply shaft diameter is no listed dimensions with special length and tolerance.

直径为16毫米以上，最大长度为5800毫米,标准公差为g6.

By request for diameter up to 16 mm we can offer max length 5800 mm.
For :standard tolerance ISO g6

铬层硬度：900-1100HV0.1

Chrome layer hardness = 900-1100 HV 01

铬层厚度：15-20 μm

Chrome thickness: 15-20 μm

表面硬度：45# 钢相当

Surface hardness: same with CK45

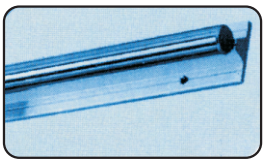

LINEAR GUIDE

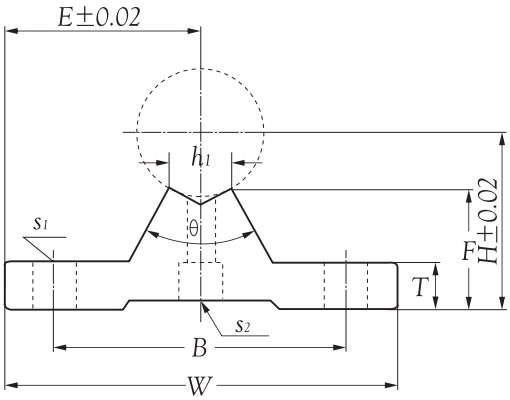

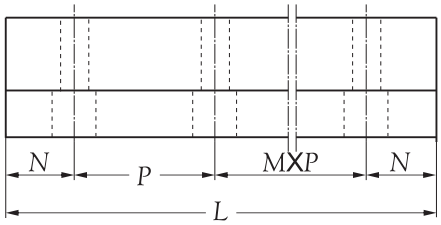

Inner bore d mm	Model No.	Principal dimensions H mm	E mm	W mm	L mm	F mm	T mm	h_1 mm	θ	Mounting dimension B mm	N mm	MXP	S_1 mm	S_2
16	STBR 16-200	22.14	25.0	50	200	15.0	6.0	8.0	60^0	37	25	1X150	5.5	M5
	STBR 16-300				300						75	1X150		
	STBR 16-400				400						50	2X150		
	STBR 16-500				500						25	3X150		
	STBR 16-600				600						75	3X150		
20	STBR 20-200	29.01	27.5	55	200	19.7	8.0	8.0	60^0	40	25	1X150	5.5	M6
	STBR 20-300				300						75	1X150		
	STBR 20-400				400						50	2X150		
	STBR 20-500				500						25	3X150		
	STBR 20-600				600						75	3X150		
25	STBR 25-200	32.00	32.5	65	200	20.0	10	8.0	60^0	45	25	1X150	6.5	M6
	STBR 25-300				300						50	1X200		
	STBR 25-400				400						100	1X200		
	STBR 25-500				500						50	2X200		
	STBR 25-600				600						100	2X200		
30	STBR 30-200	36.52	37.5	75	200	22.3	12	10.3	50^0	55	25	1X150	6.5	M8
	STBR 30-300				300						50	1X200		
	STBR 30-400				400						100	1X200		
	STBR 30-500				500						50	2X200		
	STBR 30-600				600						100	2X200		

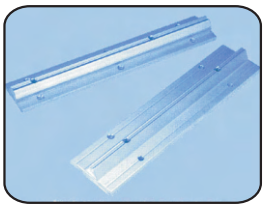

SUPPORTER

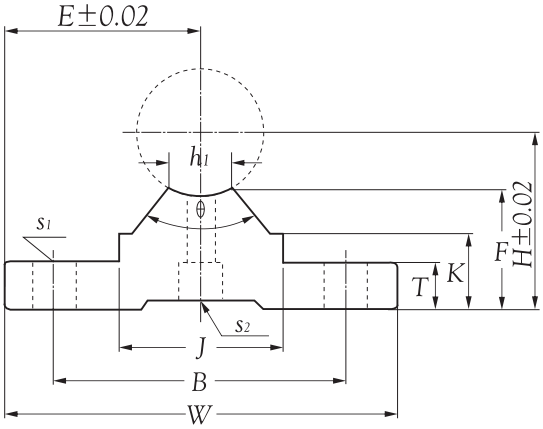

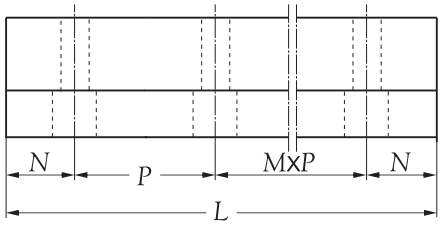

Inner bore d mm	Model No.	Principal dimensions H mm	E mm	W mm	L mm	F mm	T mm	K mm	J mm	h1 mm	θ	Mounting dimension B mm	N mm	MxP	S1 mm	S2
10	SA 10-200	18.00	16.0	32	200	13.5	4.0	8.9	12.4	4.7	80°	22	50	1X100	4.5	M4
	SA 10-300				300								50	2X100		
	SA 10-400				400								50	3X100		
	SA 10-500				500								50	4X100		
	SA 10-600				600								50	5X100		
12	SA 12-200	20.46	17.0	34	200	15.0	4.5	9.8	15.0	6.0	80°	25	50	1X100	4.5	M4
	SA 12-300				300								50	2X100		
	SA 12-400				400								50	3X100		
	SA 12-500				500								50	4X100		
	SA 12-600				600								50	5X100		
13	SA 13-200	21.00	17.0	34	200	15.0	4.5	9.8	15.0	6.0	80°	25	50	1X100	4.5	M4
	SA 13-300				300								50	2X100		
	SA 13-400				400								50	3X100		
	SA 13-500				500								50	4X100		
	SA 13-600				600								50	5X100		
16	SA 16-200	25.00	20.0	40	200	17.8	5.0	11.7	18.5	8.0	80°	30	25	1X150	5.5	M5
	SA 16-300				300								75	1X150		
	SA 16-400				400								50	2X150		
	SA 16-500				500								25	3X150		
	SA 16-600				600								75	3X150		
20	SA 20-200	27.00	22.5	45	200	17.7	5.0	10.0	19.0	8.0	50°	30	25	1X150	5.5	M6
	SA 20-300				300								75	1X150		
	SA 20-400				400								50	2X150		
	SA 20-500				500								25	3X150		
	SA 20-600				600								75	3X150		

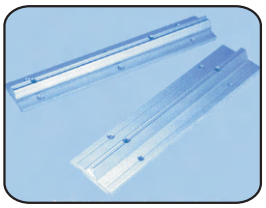

SUPPORTER

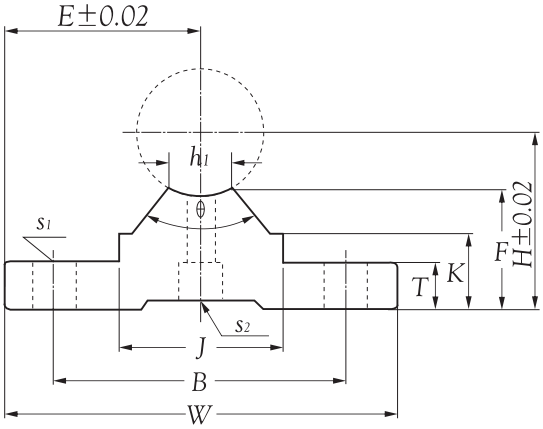

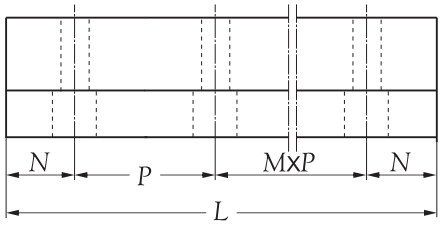

Inner bore d mm	Model No.	Principal dimensions H mm	E mm	W mm	L mm	F mm	T mm	K mm	J mm	h1 mm	θ	B mm	N mm	MxP	S1 mm	S2
25	SA 25-200	33	27.5	55	200	21.0	6	12.0	21.5	8.0	50°	35	25	1X150	6.5	M6
	SA 25-300				300								50	1X200		
	SA 25-400				400								100	1X200		
	SA 25-500				500								50	2X200		
	SA 25-600				600								100	2X200		
30	SA 30-200	37	30.0	60	200	22.8	7	13.0	26.5	10.3	50°	40	25	1X150	6.5	M8
	SA 30-300				300								50	1X200		
	SA 30-400				400								100	1X200		
	SA 30-500				500								50	2X200		
	SA 30-600				600								100	2X200		
35	SA 35-200	43	32.5	65	200	26.5	8	15.5	28.0	13.0	50°	45	25	1X150	9.0	M8
	SA 35-300				300								50	1X200		
	SA 35-400				400								100	1X200		
	SA 35-500				500								50	2X200		
	SA 35-600				600								100	2X200		
40	SA 40-200	48	37.5	75	200	29.4	9	17.0	38.0	15.5	50°	55	25	1X150	9.0	M8
	SA 40-300				300								75	1X150		
	SA 40-400				400								50	1X300		
	SA 40-500				500								100	1X300		
	SA 40-600				600								150	1X300		
50	SA 50-200	62	47.5	95	200	38.8	11	21.0	45.0	20.0	50°	70	25	1X150	11.0	M10
	SA 50-300				300								75	1X150		
	SA 50-400				400								50	1X300		
	SA 50-500				500								100	1X300		
	SA 50-600				600								150	1X300		

FLANGE
SHAFT SUPPORTER

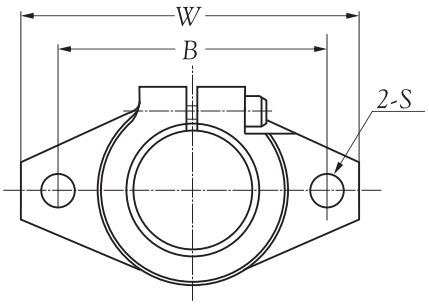

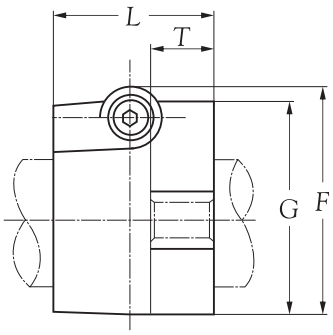

Inner bore d mm	Model No.	Principal dimensions W mm	L mm	T mm	F mm	G mm	B mm	S mm	Designation of clamping bolt	Designation of mounting bolt
10	SHF 10	43	10	5	24	20	32	5.5	M4	M5
12	SHF 12	47	13	7	28	25	36	5.5	M4	M5
13	SHF 13	47	13	7	28	25	36	5.5	M4	M5
16	SHF 16	50	16	8	31	28	40	5.5	M4	M5
20	SHF 20	60	20	8	37	34	48	7.0	M5	M6
25	SHF 25	70	25	10	42	40	56	7.0	M5	M6
30	SHF 30	80	30	12	50	46	64	9.0	M6	M8
35	SHF 35	92	35	14	58	50	72	12.0	M8	M10
40	SHF 40	102	40	16	67	56	80	12.0	M10	M10
50	SHF 50	122	50	19	83	70	96	14.0	M12	M12
60	SHF 60	140	60	23	95	82	112	14.0	M12	M12

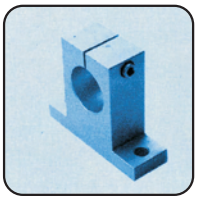

SHAFT SUPPORTER

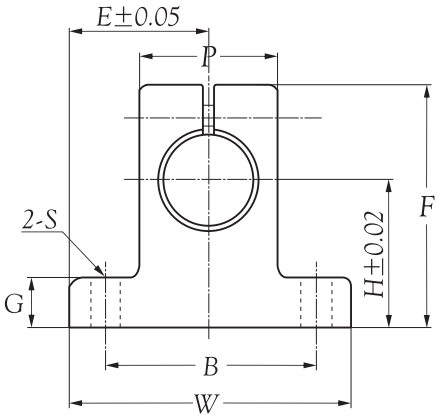

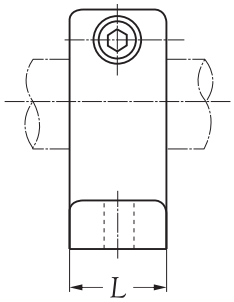

Inner bore d mm	Model No.	Principal dimensions H mm	E mm	W mm	L mm	F mm	G mm	P mm	B mm	S mm	Designation of clamping bolt	Designation of mounting bolt
3	SK 3	20	21	42	14	32.8	6	18	32	5.5	M4	M5
4	SK 4	20	21	42	14	32.8	6	18	32	5.5	M4	M5
5	SK 5	20	21	42	14	32.8	6	18	32	5.5	M4	M5
6	SK 6	20	21	42	14	32.8	6	18	32	5.5	M4	M5
8	SK 8	20	21	42	14	32.8	6	18	32	5.5	M4	M5
10	SK 10	20	21	42	14	32.8	6	18	32	5.5	M4	M5
12	SK 12	23	21	42	14	37.5	6	20	32	5.5	M4	M5
13	SK 13	23	21	42	14	37.5	6	20	32	5.5	M4	M5
16	SK 16	27	24	48	16	44.0	8	25	38	5.5	M4	M5
20	SK 20	31	30	60	20	51.0	10	30	45	6.6	M5	M6
25	SK 25	35	35	70	24	60.0	12	38	56	6.6	M6	M6
30	SK 30	42	42	84	28	70.0	12	44	64	9.0	M6	M8
35	SK 35	50	49	98	32	82.0	15	50	74	11.0	M8	M10
40	SK 40	60	57	114	36	96.0	15	60	90	11.0	M8	M10
50	SK 50	70	63	126	40	120.0	18	74	100	14.0	M12	M12
60	SK 60	80	74	148	45	136.0	18	90	120	14.0	M12	M12

CROMSTEEL

标准型 · 安装孔通孔

型号	类型			材质		表面处理
				国标	相当	
THWRB	标准型	安装孔通孔	圆法兰型	45	S45C	发黑
THWR						无电解镀镍
THWSB			方法兰型			发黑
THWS						无电解镀镍
THWCB			对边法兰型			发黑
THWC						无电解镀镍

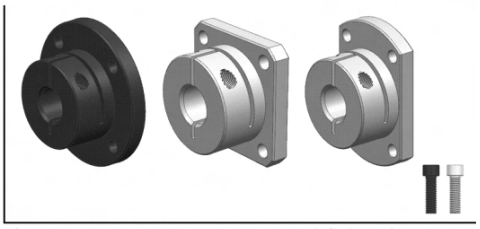

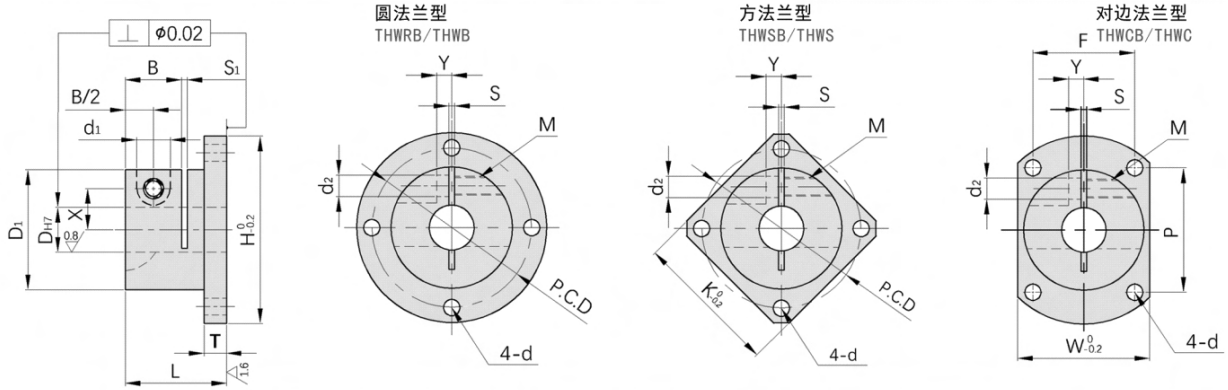

型号	DH7		L	D1	H	T	B	P.C.D	K	W	P	F	d	S	S1	X	Y	d1	d2	M	附件螺钉
圆法兰型 THWRB THWR 方法兰型 THWSB THWS 对边法兰型 THWCB THWC	8	+0.015 0	18	25	39	5	10	32	30	27	25	20	3.5	1.5	1.5	7.5	3.5	7.5	4.6	M4	M4*10
	8M																				
	10		20	30	49			40	38	32	33	23	4.5			10	3	9	5.6	M5	M5*10
	12	+0.018 0	22	32	52	6		42	40	34	35	25				11	4				M5*12
	13		24				12														
	15		27	35	56			46	44	37	37	27	5.5			12	5				
	16		30																		
	20	+0.021 0	32	40	64	8		52	50	42	43	30	6.6		2	14	6				M5*16
	25		38	45	69		15	57	54	47	46	34				17					
	30		40	55	79	10		67	60	57	50	45				20	10	12	6.6	M6	M6*20
	35		48	60	94			77	71	66	58	50				23	12				
	40	+0.025 0	55	70	104	12	18	87	81	76	67	55	9			26	13	14	9	M8	M8*25
	50		65	85	119		22	102	94	91	82	60				32	16	18	11	M10	M10*35

加长型 · 安装孔通孔

型号	类型			材质		表面处理
				国标	相当	
THWRBL	加长型	安装孔通孔	圆法兰型	45	S45C	发黑
THWRL						无电解镀镍
THWSBL			方法兰型			发黑
THWSL						无电解镀镍
THWCBL			对边法兰型			发黑
THWCL						无电解镀镍

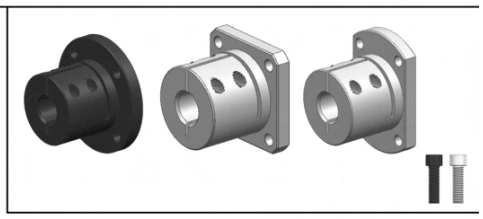

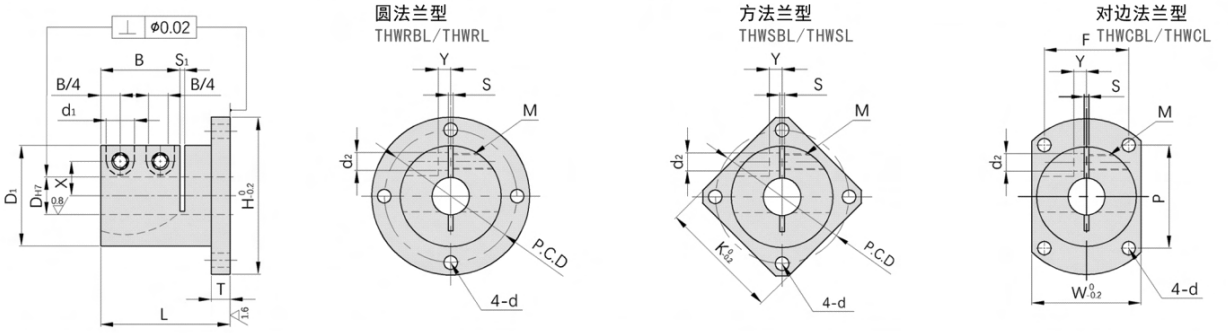

型号	DH7		L	D1	H	T	B	P.C.D	K	W	P	F	d	S	S1	X	Y	d1	d2	M	附件螺钉
圆法兰型 THWRBL THWRL 方法兰型 THWSBL THWSL 对边法兰型 THWCBL THWCL	12	+0.018 0	33	32	52	6	20	42	40	34	35	25	4.5	1.5	1.5	11	4	9	5.6	M5	M5*12
	16		45	35	56		24	46	44	37	37	27	5.5			12	5				
	20	+0.021 0	48	40	64	8		52	50	42	43	30	6.6		2	14	6				M5*16
	25		57	45	69		30	57	54	47	46	34				17					
	30		60	55	79	10		67	60	57	50	45				20	10	12	6.6	M6	M6*20
	35		72	60	94			77	71	66	58	50				23	12				
	40	+0.025 0	82.5	70	104	12	36	87	81	76	67	55	9.6			26	13	14	9	M8	M8*25
	50		97.5	85	119		44	102	94	91	82	60				32	16	18	11	M10	M10*35

PART B

直线轴承

Linear Bearing

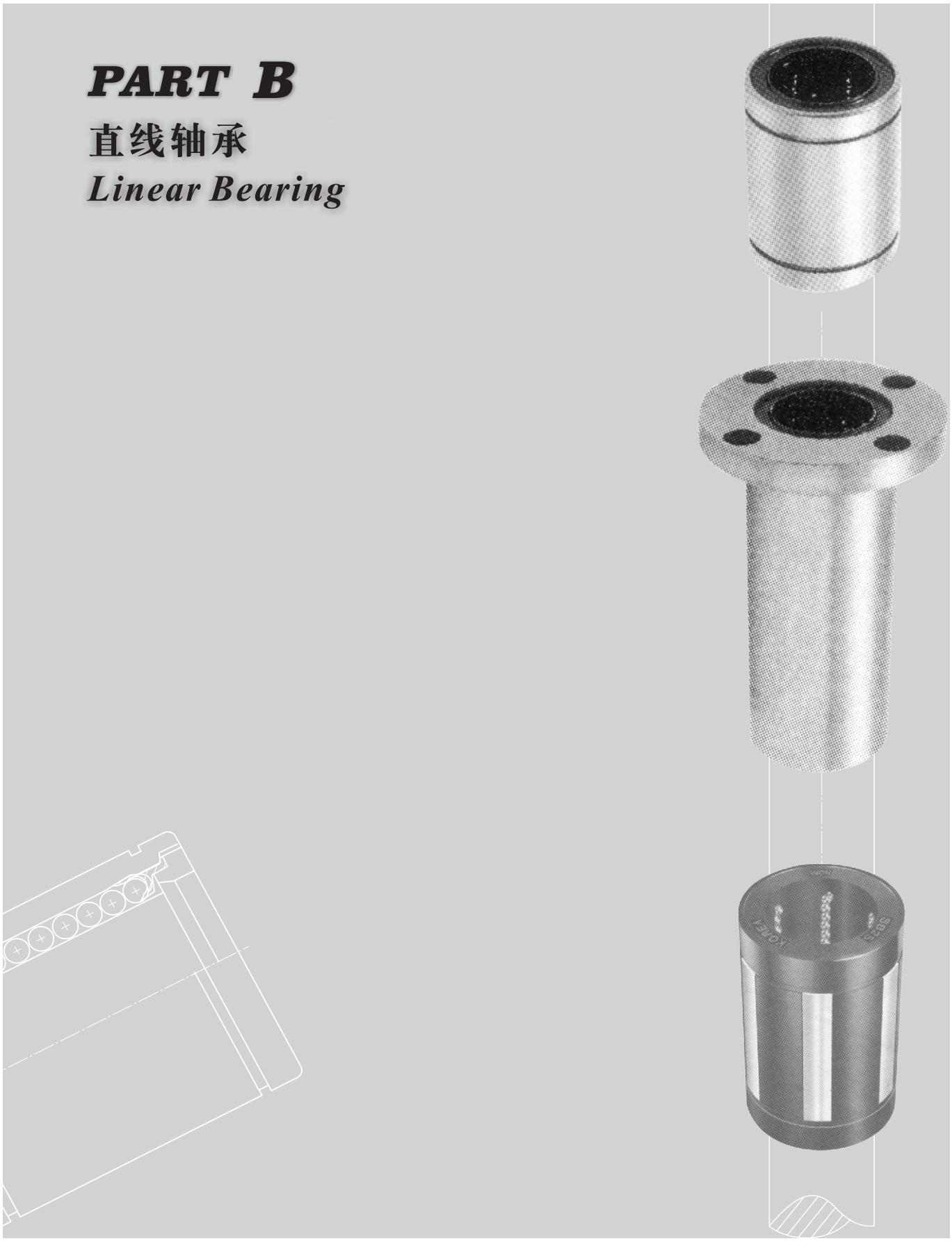

STANDARD TYPE

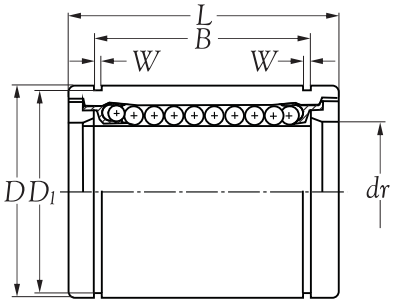

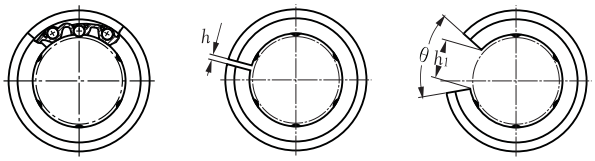

LM LM..AJ LM..OP

Inner bore d mm	Bearing number standard resin retainer	standard resin retainer	standard resin retainer	Number of ball tracks	Principal dimensions dr mm	tolerance 0.001mm	D mm	tolerance 0.001mm	L mm	tolerance mm
5	LM 5 UU	LM 5 UU-AJ	LM 5 UU-OP	4	5	(0/-8)	10	(0/-9)	15	(0/-0.12)
6	LM 6 UU	LM 6 UU-AJ	LM 6 UU-OP	4	6	(0/-9)	12	(0/-11)	19	(0/-0.2)
8S	LM 8S UU	LM 8S UU-AJ	LM 8S UU-OP	4	8	(0/-9)	15	(0/-11)	17	(0/-0.2)
8	LM 8 UU	LM 8 UU-AJ	LM 8 UU-OP	4	8	(0/-9)	15	(0/-11)	24	(0/-0.2)
10	LM 10 UU	LM 10 UU-AJ	LM 10 UU-OP	4	10	(0/-9)	19	(0/-13)	29	(0/-0.2)
12	LM 12 UU	LM 12 UU-AJ	LM 12 UU-OP	4	12	(0/-9)	21	(0/-13)	30	(0/-0.2)
13	LM 13 UU	LM 13 UU-AJ	LM 13 UU-OP	4	13	(0/-9)	23	(0/-13)	32	(0/-0.2)
16	LM 16 UU	LM 16 UU-AJ	LM 16 UU-OP	5	16	(0/-9)	28	(0/-13)	37	(0/-0.2)
20	LM 20 UU	LM 20 UU-AJ	LM 20 UU-OP	5	20	(0/-10)	32	(0/-16)	42	(0/-0.2)
25	LM 25 UU	LM 25 UU-AJ	LM 25 UU-OP	6	25	(0/-10)	40	(0/-16)	59	(0/-0.3)
30	LM 30 UU	LM 30 UU-AJ	LM 30 UU-OP	6	30	(0/-10)	45	(0/-16)	64	(0/-0.3)
35	LM 35 UU	LM 35 UU-AJ	LM 35 UU-OP	6	35	(0/-12)	52	(0/-19)	70	(0/-0.3)
40	LM 40 UU	LM 40 UU-AJ	LM 40 UU-OP	6	40	(0/-12)	60	(0/-19)	80	(0/-0.3)
50	LM 50 UU	LM 50 UU-AJ	LM 50 UU-OP	6	50	(0/-12)	80	(0/-19)	100	(0/-0.3)
60	LM 60 UU	LM 60 UU-AJ	LM 60 UU-OP	6	60	(0/-15)	90	(0/-22)	110	(0/-0.3)

Inner bore d mm	Principal dimensions B	tolerance	W mm	D_1	h	h_1	θ	Roundness 0.001mm	Steel retainer maximum radial clearance 0.001mm	Load ratings dynamic C N	static C_0 N	Weight kg
5	10.2	(0/-0.2)	1.10	9.6	-	-	-	8	-3	17	21	0.0040
6	13.5	(0/-0.2)	1.10	11.5	1.0	-	-	12	-5	21	27	0.0080
8	11.5	(0/-0.2)	1.10	14.3	1.0	-	-	12	-5	18	23	0.0110
8	17.5	(0/-0.2)	1.10	14.3	1.0	-	-	12	-5	27	41	0.0160
10	22.0	(0/-0.2)	1.30	18.0	1.0	6.8	80°	12	-5	38	56	0.0300
12	23.0	(0/-0.2)	1.30	20.0	1.5	8	80°	12	-5	42	61	0.0320
13	23.0	(0/-0.2)	1.30	22.0	1.5	9	80°	12	-7	52	79	0.0430
16	26.5	(0/-0.2)	1.60	27.0	1.5	11	80°	12	-7	79	120	0.0690
20	30.5	(0/-0.2)	1.60	30.5	1.5	11	60°	15	-9	88	140	0.0870
25	41.0	(0/-0.3)	1.85	38.0	2.0	12.5	60°	15	-9	100	160	0.2200
30	44.5	(0/-0.3)	1.85	43.0	2.5	15	60°	15	-9	160	220	0.2500
35	49.5	(0/-0.3)	2.10	49.0	2.5	17.5	60°	20	-13	170	320	0.3900
40	60.5	(0/-0.3)	2.10	57.0	3.0	20	60°	20	-13	220	410	0.5850
50	74.0	(0/-0.3)	2.60	76.5	3.0	25	60°	20	-13	390	810	1.5800
60	85.0	(0/-0.3)	3.15	86.5	3.0	30	60°	25	-16	480	1020	2.0000

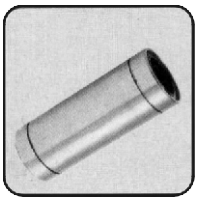

LONG TYPE

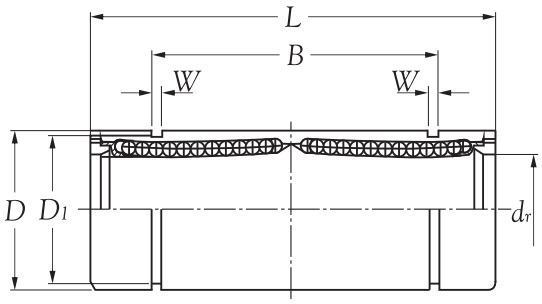

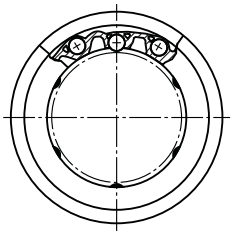

Inner bore d_r mm	Bearing number standard resin retainer	Number of ball tracks	Principal dimensions d_r mm	tolerance 0.001mm	D mm	tolerance 0.001mm	L mm	tolerance mm	B mm	tolerance mm	D_1 mm	W mm	Eccentiricity (MAX.) 0.001mm	Load ratings dynamic C N	static C_0 N
6	LM 6 L	4	6	(0/-10)	12	(0/-13)	35	(0/-0.30)	27	(0/-0.30)	11.5	1.10	15	33	54
8	LM 8 L	4	8	(0/-10)	15	(0/-13)	45	(0/-0.30)	35	(0/-0.30)	14.3	1.10	15	44	80
10	LM 10 L	4	10	(0/-10)	19	(0/-16)	55	(0/-0.30)	44	(0/-0.30)	18.0	1.30	15	60	112
12	LM 12 L	4	12	(0/-10)	21	(0/-16)	57	(0/-0.30)	46	(0/-0.30)	20.0	1.30	15	83	160
13	LM 13 L	4	13	(0/-10)	23	(0/-16)	61	(0/-0.30)	46	(0/-0.30)	22.0	1.30	15	83	160
16	LM 16 L	5	16	(0/-10)	28	(0/-16)	70	(0/-0.30)	53	(0/-0.30)	27.0	1.60	15	126	240
20	LM 20 L	5	20	(0/-12)	32	(0/-19)	80	(0/-0.30)	61	(0/-0.30)	30.5	1.60	20	143	280
25	LM 25 L	6	25	(0/-12)	40	(0/-19)	112	(0/-0.40)	82	(0/-0.40)	38.0	1.85	20	159	320
30	LM 30 L	6	30	(0/-12)	45	(0/-19)	123	(0/-0.40)	89	(0/-0.40)	43.0	1.85	20	254	560
35	LM 35 L	6	35	(0/-15)	52	(0/-22)	135	(0/-0.40)	99	(0/-0.40)	49.0	2.10	25	270	640
40	LM 40 L	6	40	(0/-15)	60	(0/-22)	151	(0/-0.40)	121	(0/-0.40)	57.0	2.10	25	350	820
50	LM 50 L	6	50	(0/-15)	80	(0/-22)	192	(0/-0.40)	148	(0/-0.40)	76.5	2.60	25	620	1622
60	LM 60 L	6	60	(0/-20)	90	(0/-25)	209	(0/-0.40)	170	(0/-0.40)	86.5	3.15	25	770	2040

FLANGE TYPE

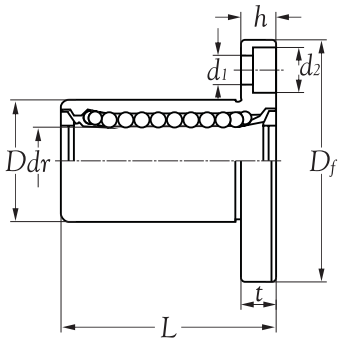

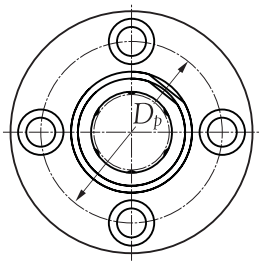

Inner bore d mm	Bearing number with seals resin retainer	Number of ball tracks	Principal dimensions dr mm	dr tolerance 0.001mm	D mm	D tolerance 0.001mm	L mm	L tolerance mm
6	LMF 6 UU	4	6	(0/-9)	12	(0/-11)	19	(0/-0.20)
8	LMF 8 UU	4	8	(0/-9)	15	(0/-11)	24	(0/-0.20)
10	LMF 10 UU	4	10	(0/-9)	19	(0/-13)	29	(0/-0.20)
12	LMF 12 UU	4	12	(0/-9)	21	(0/-13)	30	(0/-0.20)
16	LMF 16 UU	5	16	(0/-9)	28	(0/-13)	37	(0/-0.20)
20	LMF 20 UU	5	20	(0/-10)	32	(0/-16)	42	(0/-0.20)
25	LMF 25 UU	6	25	(0/-10)	40	(0/-16)	59	(0/-0.30)
30	LMF 30 UU	6	30	(0/-10)	45	(0/-16)	64	(0/-0.30)
35	LMF 35 UU	6	35	(0/-12)	52	(0/-19)	70	(0/-0.30)
40	LMF 40 UU	6	40	(0/-12)	60	(0/-19)	80	(0/-0.30)
50	LMF 50 UU	6	50	(0/-12)	80	(0/-19)	100	(0/-0.30)
60	LMF 60 UU	6	60	(0/-15)	90	(0/-22)	110	(0/-0.30)

Inner bore d mm	Principa dimensions flange Df mm	t mm	Dp mm	d1xd2xh mm	Roundness 0.001mm	Squareness 0.001mm	Load ratings dynamic C N	static C0 N
6	28	5	20	3.5 x 6.0 x 3.1	12	12	21	27
8	32	5	24	3.5 x 6.0 x 3.1	12	12	28	40
10	40	6	29	4.5 x 7.5 x 4.1	12	12	38	56
12	42	6	32	4.5 x 7.5 x 4.1	12	12	52	80
16	48	6	38	4.5 x 7.5 x 4.1	12	12	79	120
20	54	8	43	5.5 x 9.0 x 5.1	15	15	90	140
25	62	8	54	5.5 x 9.0 x 5.1	15	15	100	160
30	74	10	60	6.6 x 11 x 6.1	15	15	160	280
35	82	10	67	6.6 x 11 x 6.1	20	20	170	320
40	96	13	78	9.0 x 14 x 8.1	20	20	220	410
50	116	13	98	9.0 x 14 x 8.1	20	20	390	810
60	134	18	112	11.0 x 17.5 x 10.8	25	25	480	1020

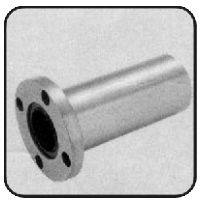

FLANGE LONE TYPE

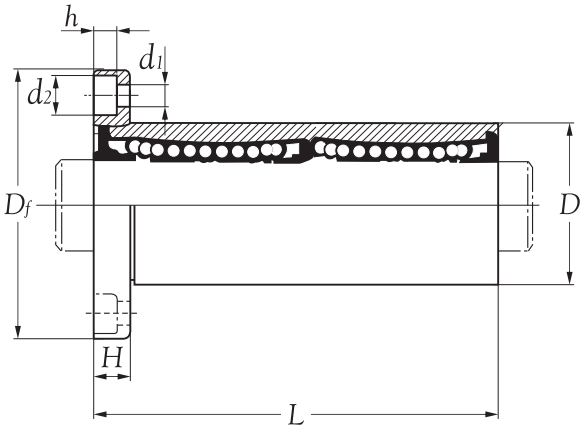

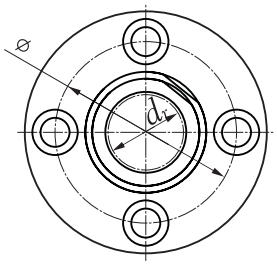

Inner bore d_r mm	Bearing number standard resin retainer	Number of ball tracks	Principal dimensions d_r mm	tolerance 0.001mm	D mm	tolerance 0.001mm	L mm	tolerance mm
6	LMF 6 L	4	6	(0/-10)	12	(0/-13)	35	(0/-0.30)
8	LMF 8 L	4	8	(0/-10)	15	(0/-13)	45	(0/-0.30)
10	LMF 10 L	4	10	(0/-10)	19	(0/-16)	55	(0/-0.30)
12	LMF 12 L	4	12	(0/-10)	21	(0/-16)	57	(0/-0.30)
13	LMF 13 L	4	13	(0/-10)	23	(0/-16)	61	(0/-0.30)
16	LMF 16 L	5	16	(0/-10)	28	(0/-16)	70	(0/-0.30)
20	LMF 20 L	5	20	(0/-12)	32	(0/-19)	80	(0/-0.30)
25	LMF 25 L	6	25	(0/-12)	40	(0/-19)	112	(0/-0.40)
30	LMF 30 L	6	30	(0/-12)	45	(0/-19)	123	(0/-0.40)
35	LMF 35 L	6	35	(0/-15)	52	(0/-22)	135	(0/-0.40)
40	LMF 40 L	6	40	(0/-15)	60	(0/-22)	151	(0/-0.40)
50	LMF 50 L	6	50	(0/-15)	80	(0/-22)	192	(0/-0.40)
60	LMF 60 L	6	60	(0/-20)	90	(0/-25)	209	(0/-0.40)

Inner bore d_r mm	Principal dimensions flange D_f mm	H mm	ϕ mm	d_1 mm	d_2 mm	h mm	Roundness 0.001mm	Squareness 0.001mm	Load ratings dynamic C N	static C_0 N
6	28	5	20	3.5	6.0	3.1	15	15	33	54
8	32	5	24	3.5	6.0	3.1	15	15	44	80
10	40	6	29	4.5	7.5	4.1	15	15	60	112
12	42	6	32	4.5	7.5	4.1	15	15	83	160
13	43	6	33	4.5	7.5	4.1	15	15	83	160
16	48	6	38	4.5	7.5	4.1	15	15	126	240
20	54	8	43	5.5	9.0	5.1	20	20	143	280
25	62	8	51	5.5	9.0	5.1	20	20	159	320
30	74	10	60	6.6	11.0	6.1	20	20	254	560
35	82	10	67	6.6	11.0	6.1	25	25	270	640
40	96	13	78	9.0	14.0	8.1	25	25	350	820
50	116	13	98	9.0	14.0	8.1	25	25	620	1622
60	134	18	112	11.0	17.5	10.8	25	25	770	2040

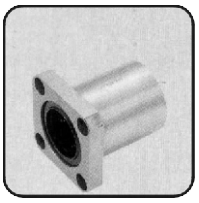

FLANGE TYPE

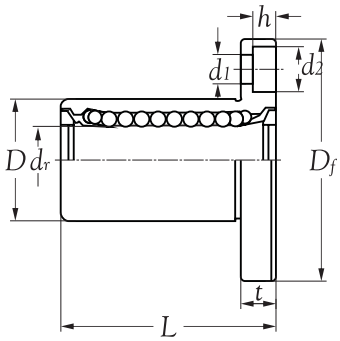

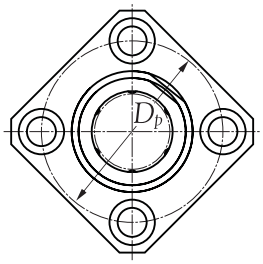

Inner bore d mm	Bearing number with seals resin retainer	Number of ball tracks	Principal dimensions dr mm	dr tolerance 0.001mm	D mm	D tolerance 0.001mm	L mm	L tolerance mm
6	LMK 6 UU	4	6	(0/-9)	12	(0/-11)	19	(0/-0.20)
8	LMK 8 UU	4	8	(0/-9)	15	(0/-11)	24	(0/-0.20)
10	LMK 10 UU	4	10	(0/-9)	19	(0/-13)	29	(0/-0.20)
12	LMK 12 UU	4	12	(0/-9)	21	(0/-13)	30	(0/-0.20)
16	LMK 16 UU	5	16	(0/-9)	28	(0/-13)	37	(0/-0.20)
20	LMK 20 UU	5	20	(0/-10)	32	(0/-16)	42	(0/-0.20)
25	LMK 25 UU	6	25	(0/-10)	40	(0/-16)	59	(0/-0.30)
30	LMK 30 UU	6	30	(0/-10)	45	(0/-16)	64	(0/-0.30)
35	LMK 35 UU	6	35	(0/-12)	52	(0/-19)	70	(0/-0.30)
40	LMK 40 UU	6	40	(0/-12)	60	(0/-19)	80	(0/-0.30)
50	LMK 50 UU	6	50	(0/-12)	80	(0/-19)	100	(0/-0.30)
60	LMK 60 UU	6	60	(0/-15)	90	(0/-22)	110	(0/-0.30)

Inner bore d mm	Principa dimensions flange Df mm	t mm	Dp mm	d1xd2xh mm	Roundness 0.001mm	Squareness 0.001mm	Load ratings dynamic C N	static C0 N
6	28	5	20	3.5 x 6.0 x 3.1	12	12	21	27
8	32	5	24	3.5 x 6.0 x 3.1	12	12	28	40
10	40	6	29	4.5 x 7.5 x 4.1	12	12	38	56
12	42	6	32	4.5 x 7.5 x 4.1	12	12	52	80
16	48	6	38	4.5 x 7.5 x 4.1	12	12	79	120
20	54	8	43	5.5 x 9.0 x 5.1	15	15	90	140
25	62	8	51	5.5 x 9.0 x 5.1	15	15	100	160
30	74	10	60	6.6 x 11 x 6.1	15	15	160	280
35	82	10	67	6.6 x 11 x 6.1	20	20	170	320
40	96	13	78	9.0 x 14 x 8.1	20	20	220	410
50	116	13	98	9.0 x 14 x 8.1	20	20	390	810
60	134	18	112	11.0 x 17.5 x 10.8	25	25	480	1020

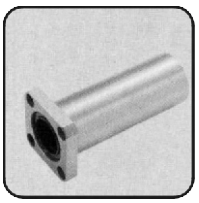

FLANGE LONG TYPE

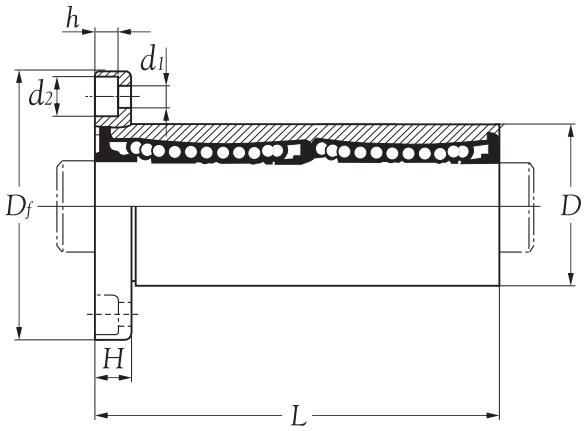

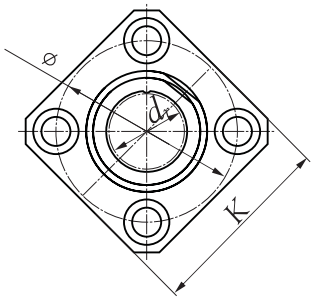

Inner bore d_r mm	Bearing number standard resin retainer	Number of ball tracks	Principal dimensions d_r mm	tolerance 0.001mm	D mm	tolerance 0.001mm	L mm	tolerance mm
6	LMK 6 L	4	6	(0/-10)	12	(0/-13)	35	(0/-0.30)
8	LMK 8 L	4	8	(0/-10)	15	(0/-13)	45	(0/-0.30)
10	LMK 10 L	4	10	(0/-10)	19	(0/-16)	55	(0/-0.30)
12	LMK 12 L	4	12	(0/-10)	21	(0/-16)	57	(0/-0.30)
13	LMK 13 L	4	13	(0/-10)	23	(0/-16)	61	(0/-0.30)
16	LMK 16 L	5	16	(0/-10)	28	(0/-16)	70	(0/-0.30)
20	LMK 20 L	5	20	(0/-12)	32	(0/-19)	80	(0/-0.30)
25	LMK 25 L	6	25	(0/-12)	40	(0/-19)	112	(0/-0.40)
30	LMK 30 L	6	30	(0/-12)	45	(0/-19)	123	(0/-0.40)
35	LMK 35 L	6	35	(0/-15)	52	(0/-22)	135	(0/-0.40)
40	LMK 40 L	6	40	(0/-15)	60	(0/-22)	151	(0/-0.40)
50	LMK 50 L	6	50	(0/-15)	80	(0/-22)	192	(0/-0.40)
60	LMK 60 L	6	60	(0/-20)	90	(0/-25)	209	(0/-0.40)

Inner bore d_r mm	Principal dimensions flange D_f mm	K mm	H mm	ϕ mm	d_1 mm	d_2 mm	h mm	Roundness 0.001mm	Squareness 0.001mm	Load ratings dynamic C N	static C_0 N
6	28	22	5	20	3.5	6.0	3.1	15	15	33	54
8	32	25	5	24	3.5	6.0	3.1	15	15	44	80
10	40	30	6	29	4.5	7.5	4.1	15	15	60	112
12	42	32	6	32	4.5	7.5	4.1	15	15	83	160
13	43	34	6	33	4.5	7.5	4.1	15	15	83	160
16	48	37	6	38	4.5	7.5	4.1	15	15	126	240
20	54	42	8	43	5.5	9.0	5.1	20	20	143	280
25	62	50	8	51	5.5	9.0	5.1	20	20	159	320
30	74	58	10	60	6.6	11.0	6.1	20	20	254	560
35	82	64	10	67	6.6	11.0	6.1	25	25	270	640
40	96	75	13	78	9.0	14.0	8.1	25	25	350	820
50	116	92	13	98	9.0	14.0	8.1	25	25	620	1622
60	134	106	18	112	11.0	17.5	10.8	25	25	770	2040

FLANGE TYPE

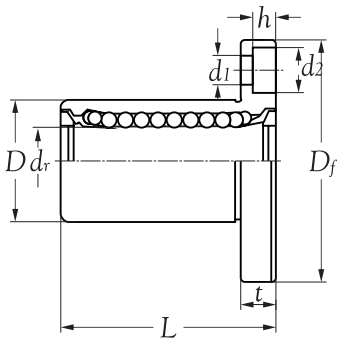

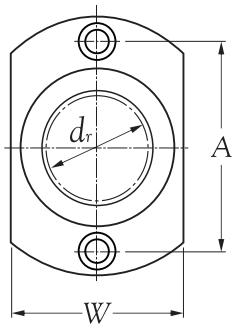

LMT6~13

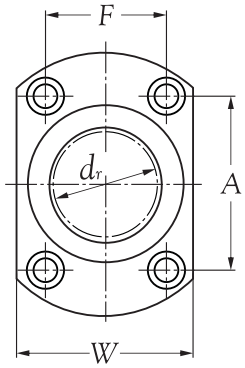

LMT16~30

Inner bore d_r mm	Bearing number with seals resin retainer	Number of ball tracks	Principal dimensions d_r mm	tolerance 0.001mm	D mm	tolerance 0.001mm	L mm	tolerance mm
6	**LMT 6 UU**	4	6	(0/-9)	12	(0/-11)	19	(0/-0.20)
8	**LMT 8 UU**	4	8	(0/-9)	15	(0/-11)	24	(0/-0.20)
10	**LMT 10 UU**	4	10	(0/-9)	19	(0/-13)	29	(0/-0.20)
12	**LMT 12 UU**	4	12	(0/-9)	21	(0/-13)	30	(0/-0.20)
13	**LMT 13 UU**	4	13	(0/-9)	23	(0/-13)	32	(0/-0.20)
16	**LMT 16 UU**	5	16	(0/-9)	28	(0/-13)	37	(0/-0.20)
20	**LMT 20 UU**	5	20	(0/-10)	32	(0/-16)	42	(0/-0.20)
25	**LMT 25 UU**	6	25	(0/-10)	40	(0/-16)	59	(0/-0.30)
30	**LMT 30 UU**	6	30	(0/-10)	45	(0/-16)	64	(0/-0.30)

Inner bore d_r mm	Principal dimensions flange D_f mm	t mm	W mm	A mm	F mm	$d_1 x d_2 x h$ mm	Eccentricity 0.001mm	Squareness 0.001mm	Basic load rating dynamic C N	static C_0 N
6	28	5	18	20	-	3.5 x 6.0 x 3.1	12	12	**21**	**27**
8	32	5	21	24	-	3.5 x 6.0 x 3.1	12	12	**27**	**41**
10	40	6	25	29	-	4.5 x 7.5 x 4.1	12	12	**38**	**56**
12	42	6	27	32	-	4.5 x 7.5 x 4.1	12	12	**42**	**61**
13	43	6	29	33	-	4.5 x 7.5 x 4.1	12	12	**52**	**79**
16	48	6	34	31	22	4.5 x 7.5 x 4.1	12	12	**79**	**120**
20	54	8	38	36	24	5.5 x 9.0 x 5.1	15	15	**88**	**140**
25	62	8	46	40	32	5.5 x 9.0 x 5.1	15	15	**100**	**160**
30	74	10	51	49	35	6.6 x 11.0 x 6.1	15	15	**160**	**280**

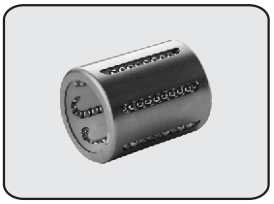

KH TYPE

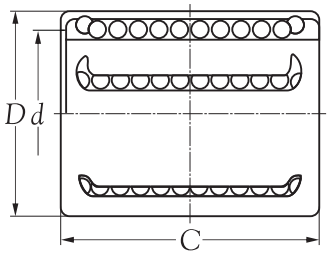

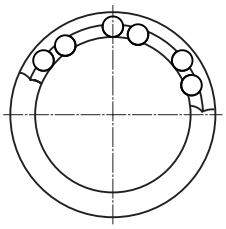

Boundary dimensions d mm	Bearing number	Number of ball tracks	Principal dimensions D mm	C mm	Basic load ratings dynamic C N	static C_o N	Max runout speed grease r/min	oil r/min	Mass kg (approx.)
6	KH 0622	4	12	22	400	239	41	24	0.0070
8	KH 0824	4	15	24	435	280	44	29	0.0120
10	KH 1026	4	17	26	500	370	51	38	0.0145
12	KH 1228	5	19	28	620	510	63	52	0.0185
14	KH 1428	5	21	28	620	520	63	53	0.0205
16	KH 1630	5	24	30	800	620	82	63	0.0275
20	KH 2030	6	28	30	950	790	97	81	0.0325
25	KH 2540	6	35	40	1990	1670	203	170	0.0660
30	KH 3050	7	40	50	2800	2700	285	275	0.0950
40	KH 4060	8	52	60	4400	4450	449	454	0.1820
50	KH 5070	9	62	70	5500	6300	561	642	0.2520

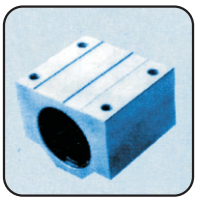

STANDARD TYPE
LINEAR BLOCK

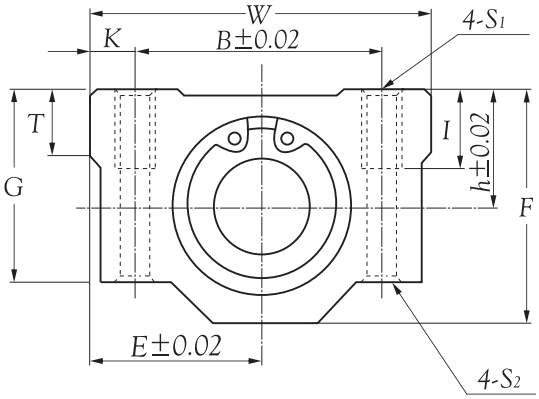

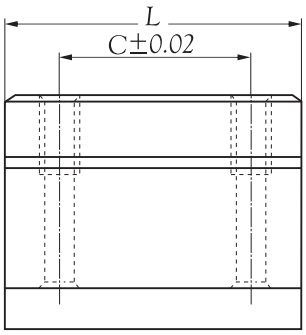

Inner bore d mm	Model No.	Principal dimensions							Mounting dimension					
		h mm	E mm	W mm	L mm	F mm	G mm	T mm	B mm	C mm	K mm	S_1	S_2 mm	I mm
8	SMA 8	11	17	34	30	22.0	18.0	6	24.0	18	5.00	M4	3.4	8
10	SMA 10	13	20	40	35	26.0	21.0	8	28.0	21	6.00	M5	4.3	12
12	SMA 12	15	21	42	36	28.0	24.0	8	30.5	26	5.75	M5	4.3	12
13	SMA 13	15	22	44	39	30.0	24.5	8	33.0	26	5.50	M5	4.3	12
16	SMA 16	19	25	50	44	38.5	32.5	9	36.0	34	7.00	M5	4.3	12
20	SMA 20	21	27	54	50	41.0	35.0	11	40.0	40	7.00	M6	5.2	12
25	SMA 25	26	38	76	67	51.5	42.0	12	54.0	50	11.00	M8	7.0	18
30	SMA 30	30	39	78	72	59.5	49.0	15	58.0	58	10.00	M8	7.0	18
35	SMA 35	34	45	90	80	68.0	54.0	18	70.0	60	10.00	M8	7.0	18
40	SMA 40	40	51	102	90	78.0	62.0	20	80.0	60	11.00	M10	8.7	25
50	SMA 50	52	61	122	110	102.0	80.0	25	100.0	80	11.00	M10	8.7	25
60	SMA 60	58	66	132	122	114.0	94.0	30	108.0	90	12.00	M12	10.7	25

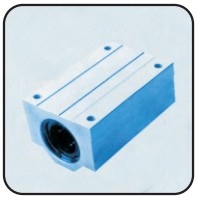

LONG TYPE
LINEAR BLOCK

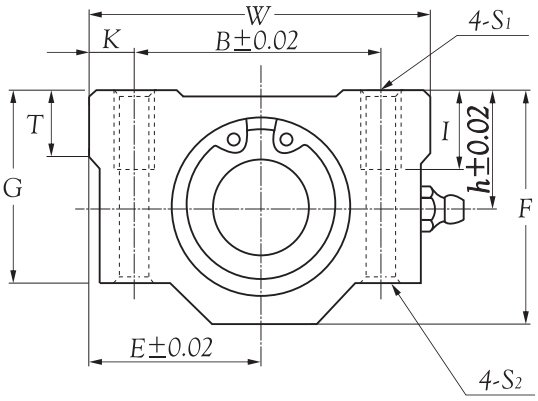

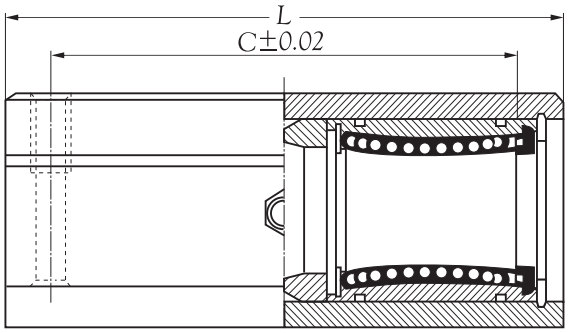

Inner bore d mm	Model No.	Principal dimensions							Mounting dimension					
		h mm	E mm	W mm	L mm	F mm	G mm	T mm	B mm	C mm	K mm	S_1	S_2 mm	I mm
8	SMA 8 L	11	17	34	58	22.0	18.0	6	24.0	42	5.00	M4	3.4	8
10	SMA 10 L	13	20	40	68	26.0	21.0	8	28.0	46	6.00	M5	4.3	12
12	SMA 12 L	15	21	42	70	28.0	24.0	8	30.5	50	5.75	M5	4.3	12
13	SMA 13 L	15	22	44	75	30.0	24.5	8	33.0	50	5.50	M5	4.3	12
16	SMA 16 L	19	25	50	85	38.5	32.5	9	36.0	60	7.00	M5	4.3	12
20	SMA 20 L	21	27	54	96	41.0	35.0	11	40.0	70	7.00	M6	5.2	12
25	SMA 25 L	26	38	76	130	51.5	42.0	12	54.0	100	11.00	M8	7.0	18
30	SMA 30 L	30	39	78	140	59.5	49.0	15	58.0	110	10.00	M8	7.0	18
35	SMA 35 L	34	45	90	155	68.0	54.0	18	70.0	120	10.00	M8	7.0	18
40	SMA 40 L	40	51	102	175	78.0	62.0	20	80.0	140	11.00	M10	8.7	25
50	SMA 50 L	52	61	122	215	102.0	80.0	25	100.0	160	11.00	M10	8.7	25
60	SMA 60 L	58	66	132	240	114.0	94.0	30	108.0	180	12.00	M12	10.7	25

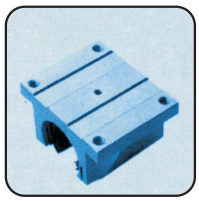

PRELOAD TYPE
LINEAR BLOCK

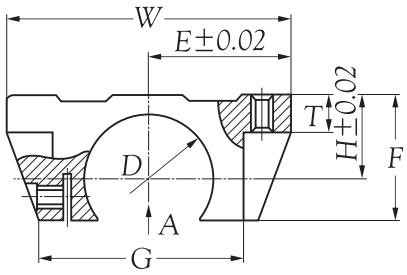

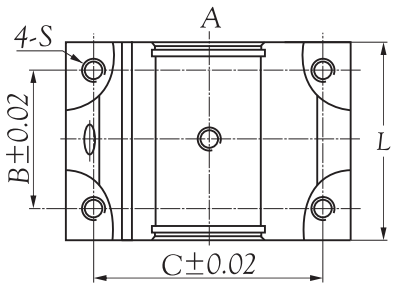

Inner bore d mm	Model No.	Principal dimensions										
		D mm	H mm	E mm	T mm	F mm	G mm	W mm	B mm	C mm	L mm	S
16	TBR 16	28	17.86	31.0	8	27.0	48.0	62	30	50	42	M5
20	TBR 20	32	20.99	34.0	10	31.4	52.4	68	37	54	51	M6
25	TBR 25	40	28.00	41.0	12	41.0	61.0	82	50	65	65	M8
30	TBR 30	45	33.48	45.5	12	48.0	65.0	91	60	75	75	M8

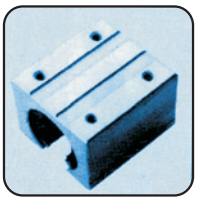

OPEN TYPE
LINEAR BLOCK

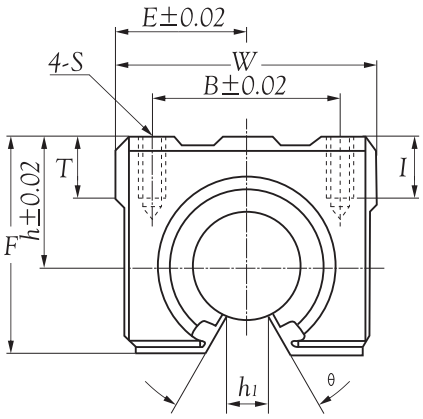

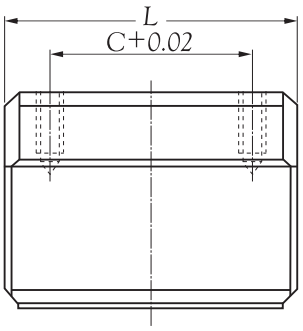

Inner bore d mm	Model No.	Main dimensions h mm	E mm	W mm	L mm	F mm	T mm	h1 mm	θ	Mounting dimension B mm	C mm	S	I mm	Basic dynamic load rating C(kgf)	Basic static load rating C(kgf)
10	SME 10	15	18.0	36	32	24.0	7	6.0	80°	25	20	M5	10	38	56
12	SME 12	17	20.0	40	39	27.6	8	8.5	80°	28	26	M5	10	42	61
13	SME 13	17	20.0	40	39	27.6	8	8.5	80°	28	26	M5	10	52	80
16	SME 16	20	22.5	45	45	33.0	9	10.0	80°	32	30	M5	12	59	91
20	SME 20	23	24.0	48	50	39.0	11	10.0	60°	35	35	M6	12	88	140
25	SME 25	27	30.0	60	65	47.0	14	11.5	50°	40	40	M6	12	100	160
30	SME 30	33	35.0	70	70	56.0	15	14.0	50°	50	50	M8	18	160	280
35	SME 35	37	40.0	80	80	63.0	18	16.0	50°	55	55	M8	18	170	320
40	SME 40	42	45.0	90	90	72.0	20	19.0	50°	65	65	M10	20	220	410
50	SME 50	53	60.0	120	110	92.0	25	23.0	50°	94	80	M10	20	390	810

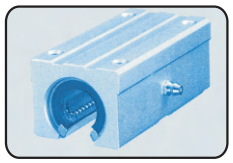

OPEN LONG TYPE
LINEAR BLOCK

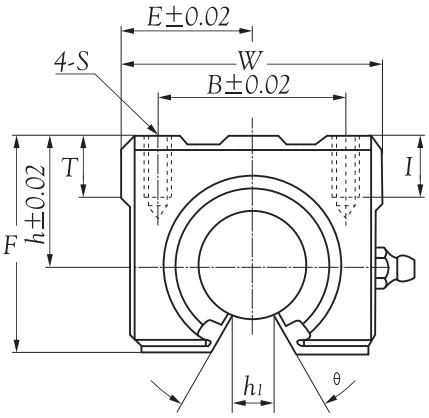

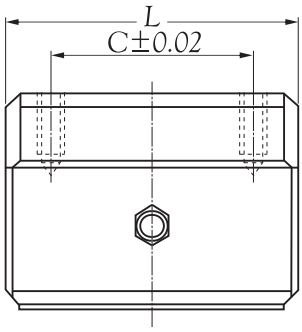

Inner bore d mm	Model No.	Main dimensions h mm	E mm	W mm	L mm	F mm	T mm	h1 mm	θ	Mounting dimension B mm	C mm	S mm	I mm	Basic dynamic load rating C(kgf)	Basic static load rating C(kgf)
16	SME 16 L	20	22.5	45	90	33	9	10.0	80^0	32	60	M5	12	158	240
20	SME 20 L	23	24.0	48	100	39	11	10.0	60^0	35	70	M6	12	180	280
25	SME 25 L	27	30.0	60	130	47	14	11.5	50^0	40	80	M6	12	200	320
30	SME 30 L	33	35.0	70	140	56	15	14.0	50^0	50	100	M8	18	320	560

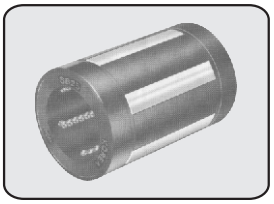

Closed type

SB: Asian Super Ball Bushing

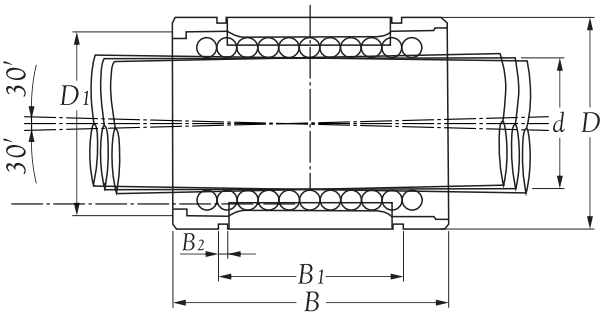

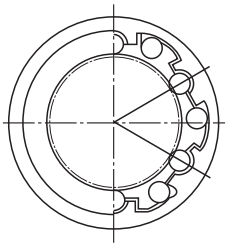

Shaft diameter d mm	Par No. without seal	with one seal	with two seals	Dimensions D	D1	B mm	B1	B2	No. Of Ball rows	Basic Load Ratings Dyn. C kgf	Stat. Co
16	SB 16	SB 16U	SB 16UU	28	27.0	37	26.5	1.60	5	125	65
20	SB 20	SB 20U	SB 20UU	32	30.5	42	30.5	1.60	6	235	125
25	SB 25	SB 25U	SB 25UU	40	38.0	59	41.0	1.85	6	440	210
30	SB 30	SB 30U	SB 30UU	45	43.0	64	44.5	1.85	6	490	260
40	SB 40	SB 40U	SB 40UU	60	57.0	80	60.5	2.10	6	950	440

产品特性:

0.5°径摆，实现静音设计

自矫正双滚道保持器设计，允许轴承在0.5° 径向摆动时，仍具有均匀分布的载荷。实现低噪音，降低磨损延长使用寿命。

6倍高载荷，小型化经济结构

超级轴承的标准载荷 6倍于普通直线轴承。通过使用小尺寸型号的产品使机械结构的尺寸及成本降低60%以上。

SBO: Asian Super Ball Bushing

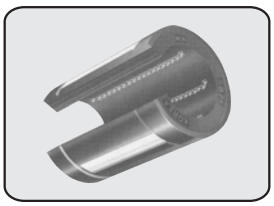

Open type

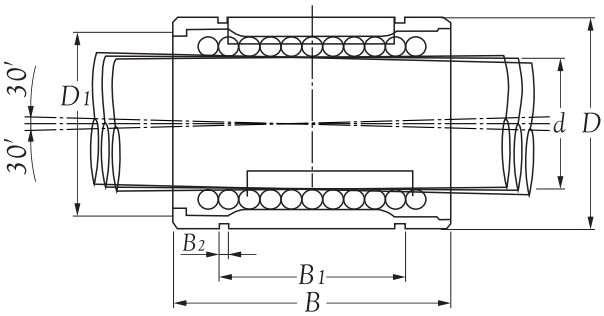

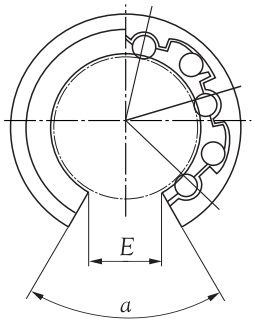

Shaft diameter d mm	Par No. without seal	with one seal	with two seals	Dimensions D	D1	B	B1	B2	E	Angle α	No. Of Ball rows	Basic Load Ratings Dyn. C	Stat. Co
				mm								kgf	
16	SBO 16	SBO 16U	SBO 16UU	28	27.0	37	26.5	1.60	11.0	60℃	4	140	77
20	SBO 20	SBO 20U	SBO 20UU	32	30.5	42	30.5	1.60	11.0	60℃	5	238	127
25	SBO 25	SBO 25U	SBO 25UU	40	38.0	59	41.0	1.85	12.5	60℃	5	444	214
30	SBO 30	SBO 30U	SBO 30UU	45	43.0	64	44.5	1.85	15.0	60℃	5	495	265
40	SBO 40	SBO 40U	SBO 40UU	60	57.0	80	60.5	2.10	20.0	60℃	5	960	450

产品特性:

0.5°径摆，实现静音设计

自矫正双滚道保持器设计，允许轴承在0.5° 径向摆动时，仍具有均匀分布的载荷。实现低噪音，降低磨损延长使用寿命。

6倍高载荷，小型化经济结构

超级轴承的标准载荷 6倍于普通直线轴承。通过使用小尺寸型号的产品使机械结构的尺寸及成本降低60%以上。

PART C

滚珠螺杆

Ball Screw

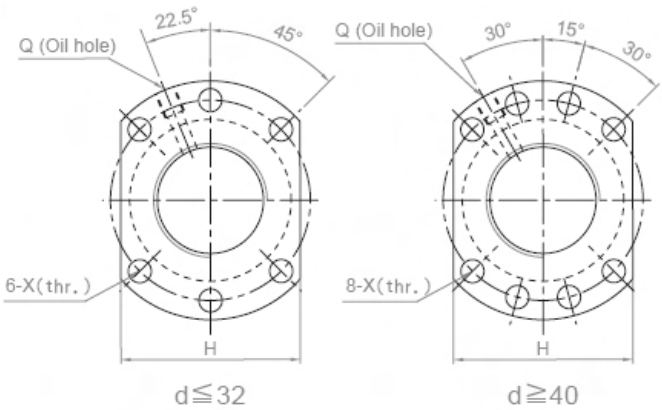

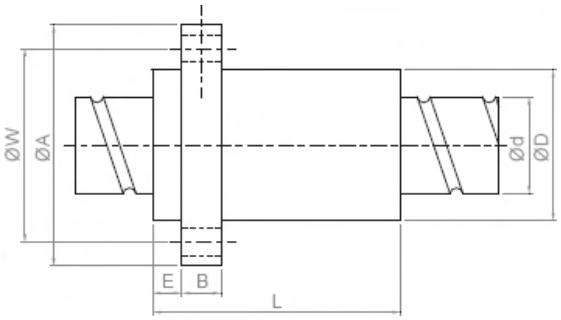

螺帽编号	螺杆外径	导程	钢珠直径	螺帽参数										基本额定负荷		K
														动负荷	静负荷	
	d	I	Da	D	A	E	B	L	W	H	X	Q	n	Ca	Coa	
								mm						kgf		kgf/μm
SFH 01205-2.8☆	12	5	2.500	24	40	5.0	10	30	32	30	4.5	-	2.8x1	661	1316	19
SFH 01210-2.8☆	12	10	2.500	24	40	5.0	10	45	32	30	4.5	-	2.8x1	642	1287	19
SFH 01605-3.8☆	15	5	2.778	28	48	5.0	10	37	38	40	5.5	M6	3.8x1	1112	2507	30
SFH 01610-2.8☆	15	10	2.778	28	48	5.0	10	45	38	40	5.5	M6	2.8x1	839	1821	23
SFH 01616-1.8☆	15	16	2.778	28	48	5.0	10	45	38	40	5.5	M6	1.8x1	552	1137	14
SFH 01616-2.8☆	15	16	2.778	28	48	5.0	10	61	38	40	5.5	M6	2.8x1	808	1769	22
SFH 01620-1.8☆	15	20	2.778	28	48	7.0	10	58	38	40	5.5	M6	1.8x1	554	1170	14
SFH 02005-3.8☆	20	5	3.175	36	58	7.0	10	37	47	44	6.6	M6	3.8x1	1484	3681	37
SFH 02010-3.8☆	20	10	3.175	36	58	7.0	10	55	47	44	6.6	M6	3.8x1	1516	3833	40
SFH 02020-1.8☆	20	20	3.175	36	58	7.0	10	54	47	44	6.6	M6	1.8x1	764	1758	19
SFH 02020-2.8☆	20	20	3.175	36	58	7.0	10	74	47	44	6.6	M6	2.8x1	1118	2734	29
SFH 02505-3.8☆	20	5	3.175	40	62	7.0	10	37	51	48	6.6	M6	3.8x1	1650	4658	43
SFH 02510-3.8☆	25	10	3.175	40	62	7.0	12	55	51	48	6.6	M6	3.8x1	1638	4633	45
SFH 02525-1.8☆	25	25	3.175	40	62	7.0	12	64	51	48	6.6	M6	1.8x1	843	2199	22
SFH 02525-2.8☆	25	25	3.175	40	62	7.0	12	89	51	48	6.6	M6	2.8x1	1232	3421	34
SFH 03205-3.8	32	5	3.175	50	80	9.0	12	37	65	62	9.0	M6	3.8x1	1839	6026	51
SFH 03210-3.8	31	10	3.969	50	80	9.0	12	57	65	62	9.0	M6	3.8x1	2460	7255	55
SFH 03220-2.8	31	20	3.969	50	80	9.0	12	76	65	62	9.0	M6	2.8x1	1907	5482	43
SFH 03232-1.8	31	32	3.969	50	80	9.0	12	80	65	62	9.0	M6	1.8x1	1257	3426	27
SFH 03232-2.8	31	32	3.969	50	80	9.0	12	112	65	62	9.0	M6	2.8x1	1838	5329	42
SFH 04005-3.8	40	5	3.175	63	93	9.0	15	42	78	70	9.0	M8	3.8x1	2018	7589	60
SFH 04010-3.8	38	10	6.350	63	93	9.0	14	60	78	70	9.0	M8	3.8x1	5035	13943	67
SFH 04020-2.8	38	20	6.350	63	93	9.0	14	80	78	70	9.0	M8	2.8x1	3959	10715	54
SFH 04040-1.8	38	40	6.350	63	93	9.0	14	98	78	70	9.0	M8	1.8x1	2585	6648	34
SFH 04040-2.8	38	40	6.350	63	93	9.0	14	138	78	70	9.0	M8	2.8x1	3780	10341	52
SFH 05005-3.8	50	5	3.175	75	110	10.5	15	42	93	85	11.0	M8	3.8x1	2207	9542	68
SFH 05010-3.8	48	10	6.350	75	110	10.5	18	60	93	85	11.0	M8	3.8x1	5638	17852	79
SFH 05020-3.8	48	20	6.350	75	110	10.5	18	100	93	85	11.0	M8	3.8x1	5749	18485	87
SFH 05050-1.8	48	50	6.350	75	110	10.5	18	120	93	85	11.0	M8	1.8x1	2946	8749	42
SFH 05050-2.8	48	50	6.350	75	110	10.5	18	170	93	85	11.0	M8	2.8x1	4308	13610	65

※ 有标注 ★ 记号者可制作 SFNH 滑台专用规范.

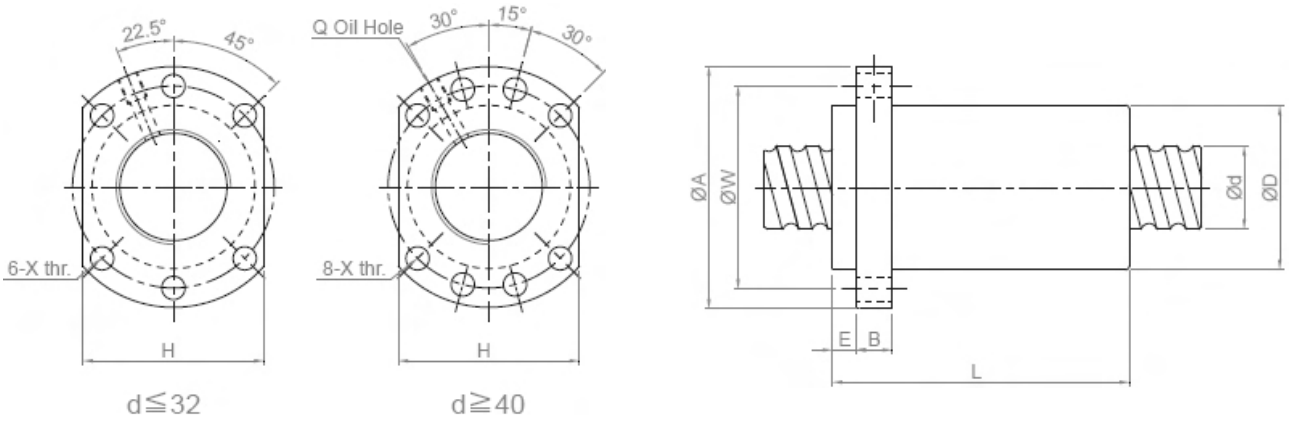

螺帽编号	螺杆外径	导程	钢珠直径	螺帽参数										基本额定负荷		K
														动负荷	静负荷	
	d	I	Da	D	A	E	B	L	W	H	X	Q	n	Ca kgf	Coa kgf	kgf/μm
SFA 1205-2.8	12	5	2.500	24	40	5.0	10	30	32	30	4.5	-	2.8×1	661	1316	19
SFA 1210-2.8	12	10	2.500	24	40	5.0	10	42	32	30	4.5	-	2.8×1	642	1287	19
SFA 1605-3.8	15	5	2.778	28	48	5.0	10	31	38	40	5.5	M6	3.8×1	1112	2507	30
SFA 1610-2.8	15	10	2.778	28	48	5.0	10	42	38	40	5.5	M6	2.8×1	839	1821	23
SFA 1616-1.8	15	16	2.778	28	48	5.0	10	43	38	40	5.5	M6	1.8×1	552	1137	14
SFA 1616-2.8	15	16	2.778	28	48	5.0	10	59	38	40	5.5	M6	2.8×1	808	1769	22
SFA 1620-1.8	15	20	2.778	28	48	5.0	10	50	38	40	5.5	M6	1.8×1	554	1170	14
SFA 1630-1.8	20	30	2.778	28	48	7.0	10	70	38	40	5.5	M6	1.8×1	534	1195	14
SFA 2005-3.8	20	5	3.175	36	58	7.0	10	33	47	44	6.6	M6	3.8×1	1484	3681	37
SFA 2010-3.8	20	10	3.175	36	58	7.0	10	52	47	44	6.6	M6	3.8×1	1516	3833	40
SFA 2020-1.8	20	20	3.175	36	58	7.0	10	52	47	44	6.6	M6	1.8×1	764	1758	19
SFA 2020-2.8	20	20	3.175	36	58	7.0	10	72	47	44	6.6	M6	2.8×1	1118	2734	29
SFA 2505-3.8	25	5	3.175	40	62	7.0	10	33	51	48	6.6	M6	3.8×1	1650	4658	43
SFA 2510-3.8	25	10	3.175	40	62	7.0	12	52	51	48	6.6	M6	3.8×1	1638	4633	45
SFA 2525-1.8	25	25	3.175	40	62	7.0	12	60	51	48	6.6	M6	1.8×1	843	2199	22
SFA 2525-2.8	25	25	3.175	40	62	7.0	12	85	51	48	6.6	M6	2.8×1	1232	3421	34
SFA 3205-3.8	32	5	3.175	50	80	9.0	12	35	65	62	9.0	M6	3.8×1	1839	6026	51
SFA 3210-3.8	31	10	3.969	50	80	9.0	12	53	65	62	9.0	M6	3.8×1	2460	7255	55
SFA 3220-2.8	31	20	3.969	50	80	9.0	12	72	65	62	9.0	M6	2.8×1	1907	5482	43
SFA 3232-1.8	31	32	3.969	50	80	9.0	12	78	65	62	9.0	M6	1.8×1	1257	3426	27
SFA 3232-2.8	31	32	3.969	50	80	9.0	12	110	65	62	9.0	M6	2.8×1	1838	5329	42
SFA 4005-3.8	40	5	3.175	63	93	9.0	14	39	78	70	9.0	M8	3.8×1	2018	7589	60
SFA 4010-3.8	38	10	6.350	63	93	9.0	14	57	78	70	9.0	M8	3.8×1	5035	13943	67
SFA 4020-2.8	38	20	6.350	63	93	9.0	14	78	78	70	9	M8	2.8×1	3959	10715	54
SFA 4040-1.8	38	40	6.350	63	93	9.0	14	96	78	70	9	M8	1.8×1	2585	6648	34
SFA 4040-2.8	38	40	6.350	63	93	9.0	14	136	78	70	9	M8	2.8×1	3780	10341	52
SFA 5005-3.8	50	5	3.175	75	110	10.5	15	42	93	85	11	M8	3.8×1	2207	9542	68
SFA 5010-3.8	48	10	6.350	75	110	10.5	18	57	93	85	11	M8	3.8×1	5638	17852	79
SFA 5020-3.8	48	20	6.350	75	110	10.5	18	98	93	85	11	M8	3.8×1	5749	18485	87
SFA 5050-1.8	48	50	6.350	75	110	10.5	18	117	93	85	11	M8	1.8×1	2946	8749	42
SFA 5050-2.8	48	50	6.350	75	110	10.5	18	167	93	85	11	M8	2.8×1	4308	13610	65

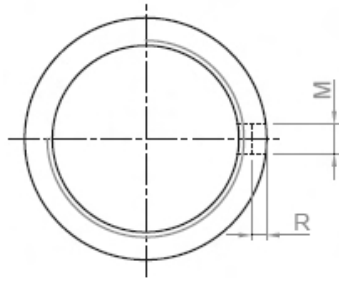

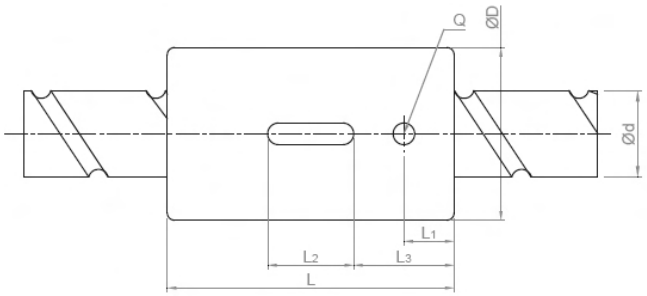

螺帽编号	螺杆外径	导程	钢珠直径	螺帽参数									基本额定负荷		K
													动负荷	静负荷	
	d	I	Da	D	L	L1	L2	L3	M	R	Q	n	Ca	Coa	
								mm					kgf		kgf/μm
SCNH 01205-4.8	12	5	2.500	24	40	7.0	12	14.0	3	1.5	3	4.8x1	1011	2105	34
SCNH 01210-2.8	12	10	2.500	24	45	8.0	15	15 .0	3	1.5	3	2.8x1	642	1287	19
SCNH 01210-1.8	12	10	2.500	24	40	10.5	12	14 .0	3	1.5	3	1.8x1	439	827	33
SCNH 01605-5.8	15	5	2.778	28	45	7.0	20	12.5	5	3.0	3	5.8x1	1599	3827	49
SCNH 01610-2.8	15	10	2.778	28	45	7.0	20	12.5	5	3.0	3	2.8x1	839	1821	23
SCNH 01616-1.8	15	16	2.778	28	45	7.0	20	12.5	5	3.0	3	1.8x1	552	1137	18
SCNH 01620-1.8	15	20	2.778	28	58	10.0	20	19 .0	5	3.0	3	1.8x1	554	1170	14
SCNH 02005-5.8	20	5	3.175	36	47	8.0	20	13.5	5	3.0	3	5.8x1	2134	5619	60
SCNH 02010-3.8	20	10	3.175	36	55	8.0	20	17.5	5	3.0	3	3.8x1	1516	3833	40
SCNH 02020-1.8	20	20	3.175	36	55	8.0	20	17.5	5	3.0	3	1.8x1	764	1758	19

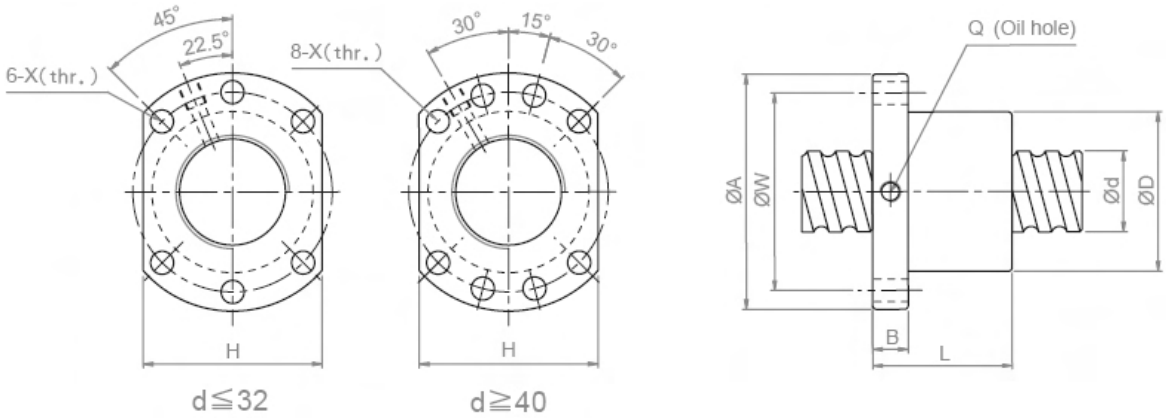

螺帽编号	螺杆外径	导程	钢珠直径	螺帽参数									基本额定负荷		K
													动负荷	静负荷	
	d	l	Da	D	A	B	L	W	H	X	Q	n	Ca	Coa	
								mm					kgf		kgf/μm
SFNU 01605-4☆	16	5	3.175	28	48	10	45	38	40	5.5	M6	1x4	1380	3052	32
SFNU 01610-3☆	16	10	3.175	28	48	10	57	38	40	5.5	M6	1x3	1103	2401	26
SFNU 02005-4☆	20	5	3.175	36	58	10	51	47	44	6.6	M6	1x4	1551	3875	39
SFNU 02505-4☆	25	5	3.175	40	62	10	51	51	48	6.6	M6	1x4	1724	4904	45
SFNU 02510-4☆	25	10	4.762	40	62	12	80	51	48	6.6	M6	1x4	2954	7295	50
SFNU 03205-4☆	32	5	3.175	50	80	12	52	65	62	9.0	M6	1x4	1922	6343	54
SFNU 03210-4☆	32	10	6.35	50	80	12	85	65	62	9.0	M6	1x4	4805	12208	61
SFNU 04005-4☆	40	5	3.175	63	93	14	55	78	70	9.0	M8	1x4	2110	7988	63
SFNU 04010-4☆	40	10	6.35	63	93	14	88	78	70	9.0	M8	1x4	5399	15500	73
SFNU 05010-4☆	50	10	6.35	75	110	16	88	93	85	11.0	M8	1x4	6004	19614	85
SFNU 06310-4	63	10	6.35	90	125	18	93	108	95	11.0	M8	1x4	6719	25358	99
SFNU 08010-4	80	10	6.35	105	145	20	93	125	110	13.5	M8	1x4	7346	31953	109
SFU 01204-4	12	4	2.5	24	40	10	40	32	30	4.5	-	1x4	902	1884	26
SFU 01604-4	16	4	2.381	28	48	10	40	38	40	5.5	M6	1x4	973	2406	32
SFU 02004-4	20	4	2.381	36	58	10	42	47	44	6.6	M6	1x4	1066	2987	38
SFU 02504-4	25	4	2.381	40	62	10	42	51	48	6.6	M6	1x4	1180	3795	43
SFU 02506-4	25	6	3.969	40	62	10	54	51	48	6.6	M6	1x4	2318	6057	47
SFU 02508-4	25	8	4.762	40	62	10	63	51	48	6.6	M6	1x4	2963	7313	49
SFU 03204-4	32	4	2.381	50	80	12	44	65	62	9.0	M6	1x4	1296	4838	51
SFU 03206-4	32	6	3.969	50	80	12	57	65	62	9.0	M6	1x4	2632	7979	57
SFU 03208-4	32	8	4.762	50	80	12	65	65	62	9.0	M6	1x4	3387	9622	60
SFU 04006-4	40	6	3.969	63	93	14	60	78	70	9.0	M6	1x4	2873	9913	66
SFU 04008-4	40	8	4.762	63	93	14	67	78	70	9.0	M6	1x4	3712	11947	70
SFU 05020-4	50	20	7.144	75	110	16	138	93	85	11.0	M8	1x4	7142	22588	94
SFU 06320-4	63	20	9.525	95	135	20	149	115	100	13.5	M8	1x4	11444	36653	112
SFU 08020-4	80	20	9.525	125	165	25	154	145	130	13.5	M8	1x4	12911	47747	138
SFU 10020-4	100	20	9.525	150	202	30	180	170	155	17.5	M8	1x4	14303	60698	162

※ 有标注 ★ 记号者可制作左螺纹.

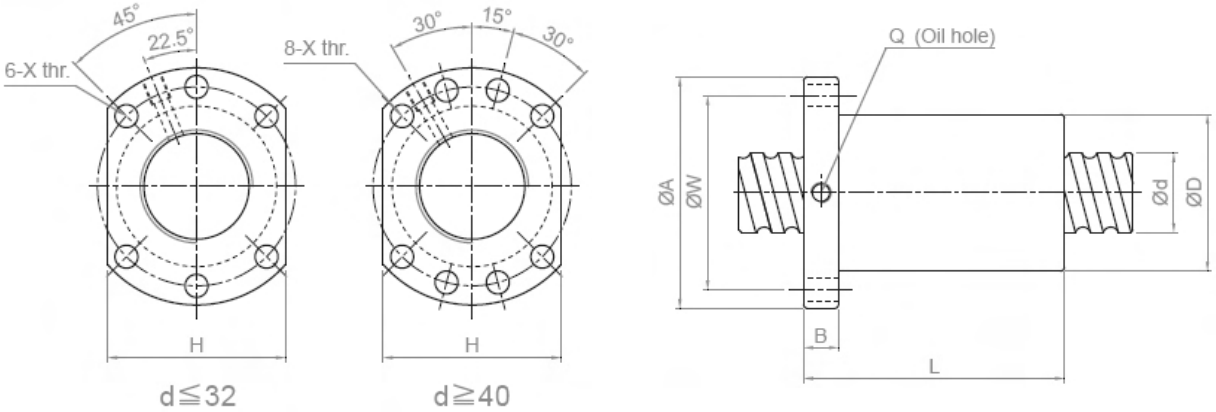

螺帽编号	螺杆外径	导程	钢珠直径	螺帽参数									基本额定负荷		K
													动负荷	静负荷	
	d	l	Da	D	A	B	L	W	H	X	Q	n	Ca	Coa	
								mm					kgf		kgf/μm
OFU 01605-4	16	5	3.175	28	48	10	75	38	40	5.5	M6	1x8	1380	3052	44
OFU 02005-4	20	5	3.175	36	58	10	85	47	44	6.6	M6	1x8	1551	3875	53
OFU 02505-4	25	5	3.175	40	62	10	86	51	48	6.6	M6	1x8	1724	4904	62
OFU 02510-4	25	10	4.762	40	62	12	130	51	48	6.6	M6	1x8	2954	7295	67
OFU 03205-4	32	5	3.175	50	80	12	87	65	62	9.0	M6	1x8	1922	6343	74
OFU 03210-4	32	10	6.350	50	80	12	145	65	62	9.0	M6	1x8	4805	12208	82
OFU 04005-4	40	5	3.175	63	93	14	90	78	70	9.0	M8	1x8	2110	7988	87
OFU 04010-4	40	10	6.350	63	93	14	148	78	70	9.0	M8	1x8	5399	15500	99
OFU 05010-4	50	10	6.350	75	110	16	148	93	85	11.0	M8	1x8	6004	19614	117
OFU 06310-4	63	10	6.350	90	125	18	153	108	95	11.0	M8	1x8	6719	25358	139
OFU 08010-4	80	10	6.350	105	145	20	153	125	110	13.5	M8	1x8	7346	31953	156
DFU 01604-4	16	4	2.381	28	48	10	80	38	40	5.5	M6	1x4	973	2406	43
DFU 02004-4	20	4	2.381	36	58	10	80	47	44	6.6	M6	1x4	1066	2987	51
DFU 02504-4	25	4	2.381	40	62	10	80	51	48	6.6	M6	1x4	1180	3795	60
DFU 02506-4	25	6	3.969	40	62	10	105	51	48	6.6	M6	1x4	2318	6057	64
DFU 02508-4	25	8	4.762	40	62	10	120	51	48	6.6	M6	1x4	2963	7313	67
DFU 03204-4	32	4	2.381	50	80	12	80	65	62	9.0	M6	1x4	1296	4838	71
DFU 03206-4	32	6	3.969	50	80	12	105	65	62	9.0	M6	1x4	2632	7979	78
DFU 03208-4	32	8	4.762	50	80	12	122	65	62	9.0	M6	1x4	3387	9622	82
DFU 04006-4	40	6	3.969	63	93	14	108	78	70	9.0	M6	1x4	2873	9913	91
DFU 04008-4	40	8	4.762	63	93	14	132	78	70	9.0	M6	1x4	3712	11947	96
DFU 05020-4	50	20	7.144	75	110	16	280	93	85	11.0	M8	1x4	7142	22588	126
DFU 06320-4	63	20	9.525	95	135	20	290	115	100	13.5	M8	1x4	11444	36653	152
DFU 08020-4	80	20	9.525	125	165	25	295	145	130	13.5	M8	1x4	12911	47747	187
DFU 10020-4	100	20	9.525	150	202	30	340	170	155	17.5	M8	1x4	14303	60698	222

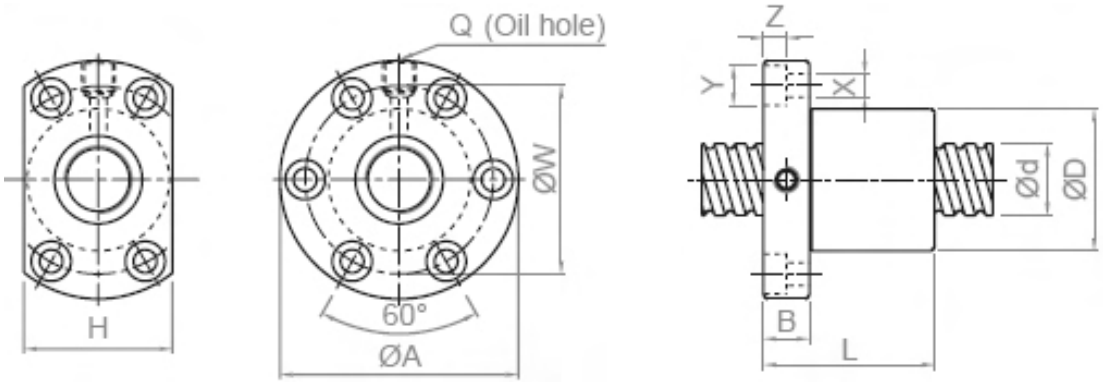

螺帽编号	螺杆外径	导程	钢珠直径	螺帽参数											基本额定负荷		K
															动负荷	静负荷	
	d	l	Da	D	A	B	L	W	H	X	Y	Z	Q	n	Ca	Coa	
									mm						kgf		kgf/μm
SFNI 01605-4☆	16	5.00	3.175	30	49	10	45	39	34	4.5	8.0	4.5	M6	1x4	1380	3052	33
SFNI 01610-3☆	16	10.00	3.175	34	58	10	57	45	34	5.5	9.5	5.5	M6	1x3	1103	2401	27
SFNI 02005-4☆	20	5.00	3.175	34	57	11	51	45	40	5.5	9.5	5.5	M6	1x4	1551	3875	39
SFNI 02505-4☆	25	5.00	3.175	40	63	11	51	51	46	5.5	9.5	5.5	M8	1x4	1724	4904	45
SFNI 02510-4☆	25	10.00	4.762	46	72	12	80	58	52	6.5	11.0	6.5	M6	1x4	2954	7295	51
SFNI 03205-4☆	32	5.00	3.175	46	72	12	52	58	52	6.5	11.0	6.5	M8	1x4	1922	6343	52
SFNI 03210-4☆	32	10.00	6.350	54	88	15	85	70	62	9.0	14.0	8.5	M8	1x4	4805	12208	62
SFNI 04005-4☆	40	5.00	3.175	56	90	15	55	72	64	9.0	14.0	8.5	M8	1x4	2110	7988	59
SFNI 04010-4☆	40	10.00	6.350	62	104	18	88	82	70	11.0	17.5	11.0	M8	1x4	5399	15500	72
SFNI 05010-4☆	50	10.00	6.350	72	114	18	88	92	82	11.0	17.5	11.0	M8	1x4	6004	19614	83
SFNI 06310-4	63	10.00	6.350	85	131	22	93	107	95	14.0	20.0	13.0	M8	1x4	6719	25358	95
SFNI 08010-4	80	10.00	6.350	105	150	22	93	127	115	14.0	20.0	13.0	M8	1x4	7346	31953	109
SFI 01604-4	16	4.00	2.381	30	49	10	45	39	34	4.5	8.0	4.5	M6	1x4	973	2406	32
SFI 02004-4	20	4.00	2.381	34	57	11	46	45	40	5.5	9.5	5.5	M6	1x4	1066	2987	37
SFI 0205T-4	20	5.08	3.175	34	57	11	51	45	40	5.5	9.5	5.5	M6	1x4	1550	3875	39
SFI 02504-4☆	25	4.00	2.381	40	63	11	46	51	46	5.5	9.5	5.5	M6	1x4	1180	3795	43
SFI 0255T-4	25	5.08	3.175	40	63	11	51	51	46	5.5	9.5	5.5	M8	1x4	1724	4903	45
SFI 03204-4	32	4.00	2.381	46	72	12	47	58	52	6.5	11.0	6.5	M6	1x4	1296	4838	49

※ 有标注 ★ 记号者可制作左螺纹.

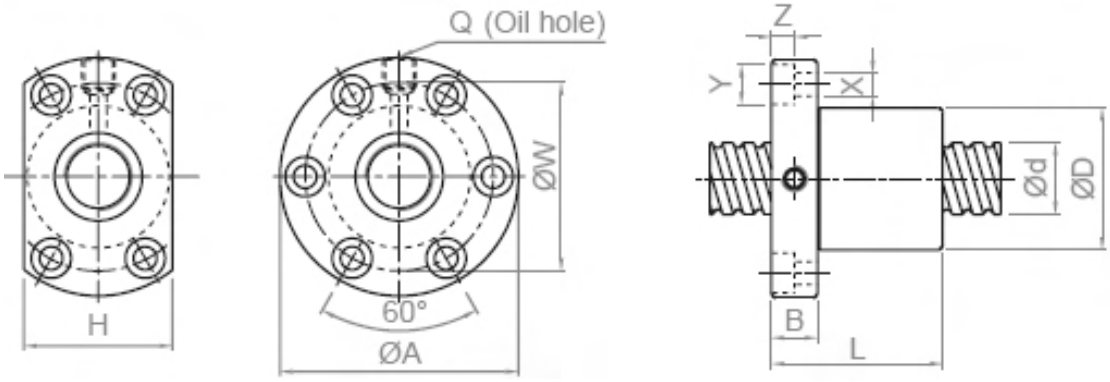

螺帽编号	螺杆外径	导程	钢珠直径	螺帽参数											基本额定负荷		K
															动负荷	静负荷	
	d	l	Da	D	A	B	L	W	H	X	Y	Z	Q	n	Ca	Coa	
									mm						kgf		kgf/μm
SFM 03205-4☆	32	5.00	3.175	48	74	12	52	60	60	6.5	11	6.5	M8	1x4	1922	6343	53
SFM 0325T-4☆	32	5.08	3.175	48	74	12	53	60	60	6.5	11	6.5	M8	1x4	1922	6343	53

※ 有标注 ★ 记号者可制作左螺纹.

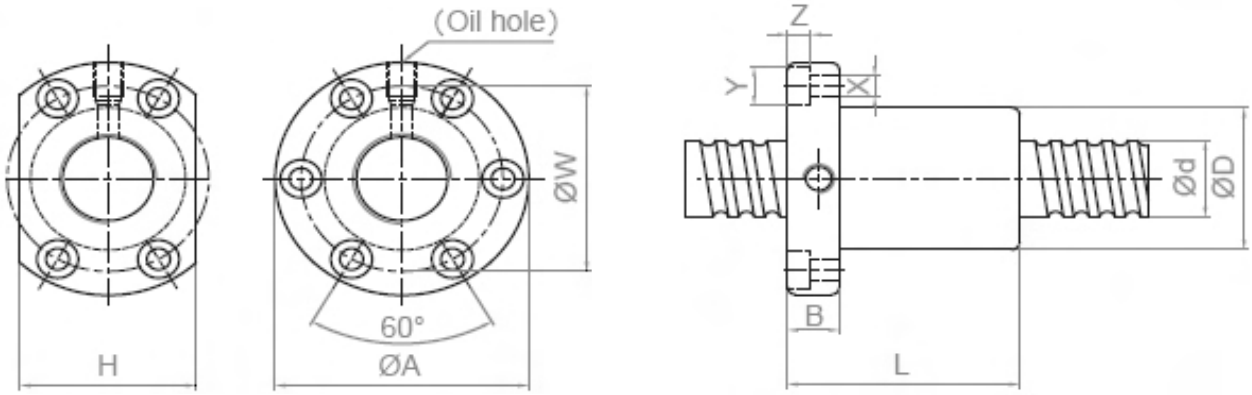

螺帽编号	螺杆外径	导程	钢珠直径	螺帽参数											基本额定负荷		K
															动负荷	静负荷	
	d	l	Da	D	A	B	L	W	H	X	Y	Z	Q	n	Ca	Coa	
									mm						kgf		kgf/μm
OFI 01605-4	16	5.00	3.175	30	49	10	75	39	34	4.5	8.0	4.5	M6	1x8	1380	3052	44
OFI 02005-4	20	5.00	3.175	34	57	11	85	45	40	5.5	9.5	5.5	M6	1x8	1551	3875	52
OFI 02505-4	25	5.00	3.175	40	63	11	86	51	46	5.5	9.5	5.5	M8	1x8	1724	4904	62
OFI 02510-4	25	10.00	4.762	46	72	12	130	58	52	6.5	11.0	6.5	M6	1x8	2954	7295	68
OFI 03205-4	32	5.00	3.175	46	72	12	87	58	52	6.5	11.0	6.5	M8	1x8	1922	6343	72
OFI 03210-4	32	10.00	6.350	54	88	15	145	70	62	9.0	14.0	8.5	M8	1x8	4805	12208	83
OFI 04005-4	40	5.00	3.175	56	90	15	90	72	64	9.0	14.0	8.5	M8	1x8	2110	7988	84
OFI 04010-4	40	10.00	6.350	62	104	18	148	82	70	11.0	17.5	11.0	M8	1x8	5399	15500	99
OFI 05010-4	50	10.00	6.350	72	114	18	148	92	82	11.0	17.5	11.0	M8	1x8	6004	19614	115
OFI 06310-4	63	10.00	6.350	85	131	22	153	107	95	14.0	20.0	13.0	M8	1x8	6719	25358	135
OFI 08010-4	80	10.00	6.350	105	150	22	153	127	115	14.0	20.0	13.0	M8	1x8	7346	31953	156
DFI 01604-4	16	4.00	2.381	30	49	10	80	39	34	4.5	8.0	4.5	M6	1x4	973	2406	44
DFI 02004-4	20	4.00	2.381	34	57	11	80	45	40	5.5	9.5	5.5	M6	1x4	1066	2987	51
DFI 02504-4	25	4.00	2.381	40	63	11	80	51	46	5.5	9.5	5.5	M6	1x4	1180	3795	60
DFI 0255T-4	25	5.08	3.175	40	63	11	101	51	46	5.5	9.5	5.5	M8	1x4	1724	4903	62
DFI 03204-4	32	4.00	2.381	46	72	12	80	58	52	6.5	11.0	6.5	M6	1x4	1296	4838	69
DFI 0325T-4	32	5.08	3.175	46	72	12	102	58	52	6.5	11.0	6.5	M8	1x4	1922	6343	72

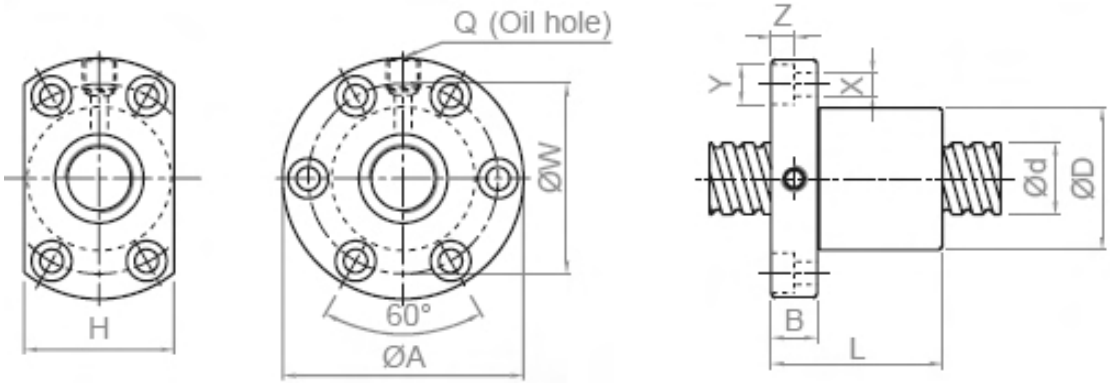

螺帽编号	螺杆外径	导程	钢珠直径	螺帽参数											基本额定负荷		K
															动负荷	静负荷	
	d	l	Da	D	A	B	L	W	H	X	Y	Z	Q	n	Ca	Coa	
									mm						kgf		kgf/μm
DFM 03205-4☆	32	5.00	3.175	48	74	12	102	60	60	6.5	11	6.5	M8	1x4	1922	6343	73
DFM 0325T-4☆	32	5.08	3.175	48	74	12	104	60	60	6.5	11	6.5	M8	1x4	1922	6343	73

※ 有标注 ★ 记号者可制作左螺纹. 双螺帽下单前请询问 Cromsteel 业务人员.

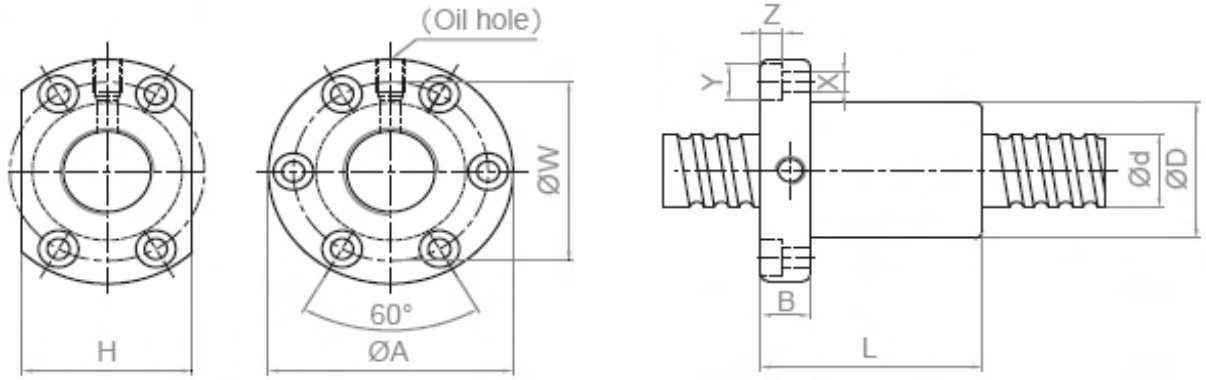

螺帽编号	螺杆外径 d	导程 l	钢珠直径 Da	螺帽参数 D	A	B	L	W	H	X	Y	Z	Q	n	基本额定负荷 动负荷 Ca	静负荷 Coa	K
				mm											kgf		kgf/μm
SFV 01205-2.8	12	5	2.500	30	50	10	42	40	32	4.5	8.0	4.5	M6	2.8x1	661	1316	19
SFV 01210-2.7	12	10	2.500	30	50	10	53	40	32	4.5	8.0	4.5	M6	2.7x1	623	1241	18
SFV 01510-2.7	15	10	3.175	34	58	10	57	45	34	5.5	9.5	5.5	M6	2.7x1	972	2020	23
SFV 01604-3.8	16	4	2.381	34	57	11	45	45	34	5.5	9.5	5.5	M6	3.8x1	931	2285	31
SFV 01605-4.8	16	5	3.175	40	63	11	58	51	42	5.5	9.5	5.5	M6	4.8x1	1614	3662	40
SFV 01610-2.7	16	10	3.175	40	63	11	56	51	42	5.5	9.5	5.5	M6	2.7x1	1008	2161	24
SFV 02004-4.8	20	4	2.381	40	60	10	50	50	40	4.5	8.0	4.0	M6	4.8x1	1247	3584	45
SFV 02005-4.8	20	5	3.175	44	67	11	57	55	52	5.5	9.5	5.5	M6	4.8x1	1814	4650	47
SFV 02010-2.7	20	10	3.969	46	74	13	57	59	46	6.6	11.0	6.5	M6	2.7x1	1518	3398	30
SFV 02020-1.8	20	20	3.175	46	74	13	70	59	46	6.6	11.0	6.5	M6	1.8x1	764	1758	19
SFV 02505-4.8	25	5	3.175	50	73	11	55	61	52	5.5	9.5	5.5	M8	4.8x1	2017	5884	56
SFV 02506-4.8	25	6	3.969	53	76	11	62	64	58	5.5	9.5	5.5	M6	4.8x1	2711	7268	58
SFV 02508-4.8	25	8	4.762	56	85	13	70	71	64	6.5	11.0	6.5	M6	4.8x1	3466	8776	61
SFV 02510-2.7	25	10	6.350	68	102	15	70	84	82	9.0	14.0	8.5	M8	2.7x1	3040	6547	37
SFV 02525-1.8	25	25	3.175	50	73	13	83	61	52	5.5	9.5	5.5	M8	1.8x1	843	2199	22
SFV 03204-4.8	32	4	2.381	54	81	12	50	67	64	6.6	11.0	6.5	M6	4.8x1	1517	5806	62
SFV 03205-4.8	32	5	3.175	58	85	12	56	71	64	6.6	11.0	6.5	M8	4.8x1	2249	7612	66
SFV 03206-4.8	32	6	3.969	62	89	12	60	75	68	6.6	11.0	6.5	M8	4.8x1	3079	9575	70
SFV 03208-4.8	32	8	4.762	66	100	15	75	82	76	9.0	14.0	8.5	M8	4.8x1	3962	11547	74
SFV 03210-4.8	32	10	6.350	74	108	15	96	90	82	9.0	14.0	9.0	M8	4.8x1	5620	14649	76
SFV 03220-2.7	32	20	6.350	74	108	16	100	90	82	9.0	14.0	8.5	M8	2.7x1	3509	8644	46
SFV 04005-4.8	40	5	3.175	67	101	15	59	83	72	9.0	14.0	8.5	M8	4.8x1	2468	9586	76
SFV 04010-4.8	40	10	6.350	82	124	18	100	102	94	11.0	17.5	11.0	M8	4.8x1	6316	18600	90
SFV 04020-2.7	40	20	6.350	82	124	18	100	102	90	11.0	17.5	11.0	M8	2.7x1	3935	10893	56
SFV 05005-4.8	50	5	3.175	80	114	15	60	96	82	9.0	14.0	8.5	M8	4.8x1	2698	12053	87
SFV 05010-4.8	50	10	6.350	93	135	16	93	113	98	11.0	17.5	11.0	M8	4.8x1	7023	23537	106
SFV 05020-2.7	50	20	9.525	105	152	28	121	128	110	14.0	20.0	13.0	M8	2.7x1	7336	19700	68

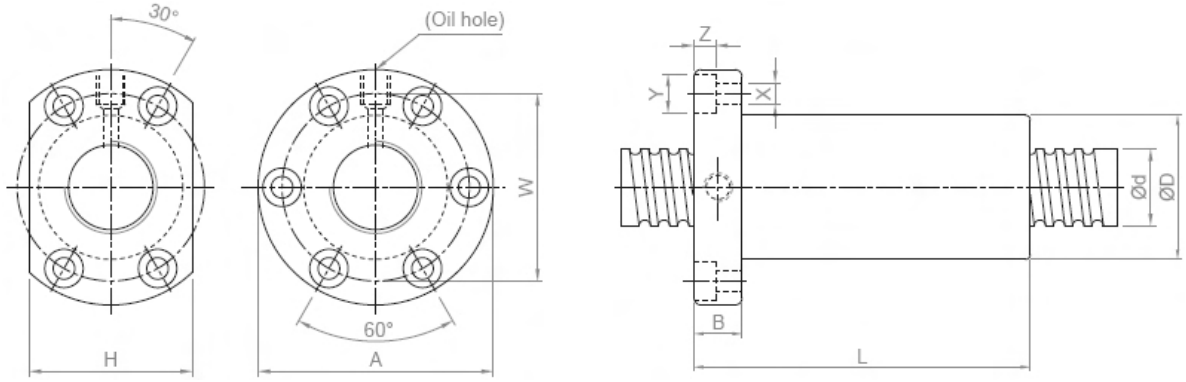

螺帽编号	螺杆外径	导程	钢珠直径	螺帽参数											基本额定负荷		K
															动负荷	静负荷	
	d	l	Da	D	A	B	L	W	H	X	Y	Z	Q	n	Ca	Coa	
									mm						kgf		kgf/μm
OFV 01605-4.8	16	5	3.175	40	63	11	100	51	42	5.5	9.5	5.5	M6	4.8x2	1614	3662	53
OFV 02005-4.8	20	5	3.175	44	67	11	102.5	55	52	5.5	9.5	5.5	M6	4.8x2	1814	4650	63
OFV 02505-4.8	25	5	3.175	50	73	11	96	61	52	5.5	9.5	5.5	M8	4.8x2	2017	5884	75
OFV 03205-4.8	32	5	3.175	58	85	12	98	71	64	6.6	11.0	6.5	M8	4.8x2	2249	7612	90
OFV 03210-4.8	32	10	6.350	74	108	15	166	90	82	9.0	14.0	9.0	M8	4.8x2	5620	14649	101
OFV 04005-4.8	40	5	3.175	67	101	15	100	83	72	9.0	14.0	8.5	M8	4.8x2	2468	9586	105
OFV 04010-4.8	40	10	6.350	82	124	18	174	102	94	11.0	17.5	11.0	M8	4.8x2	6316	18600	121
OFV 05010-4.8	50	10	6.350	93	135	16	167	113	98	11.0	17.5	11.0	M8	4.8x2	7023	23537	144
OFV 06310-4.8	63	10	6.350	108	154	22	177	130	110	14.0	20.0	13.0	M8	4.8x2	7860	30430	172
OFV 08010-4.8	80	10	6.350	130	176	22	178	152	132	14.0	20.0	13.0	M8	4.8x2	8593	38344	201
DFV 01510-2.7	15	10	3.175	34	58	10	107	45	34	5.5	9.5	5.5	M6	2.7x1	972	2020	30
DFV 01604-3.8	16	4	2.381	34	57	11	89	45	34	5.5	9.5	5.5	M6	3.8x1	931	2285	42
DFV 02004-4.8	20	4	2.381	40	60	10	94	50	40	4.5	8.0	4.0	M6	4.8x1	1247	3584	61
DFV 02010-2.7	20	10	3.969	46	74	13	117	59	46	6.6	11.0	6.5	M6	2.7x1	1518	3398	40
DFV 02506-4.8	20	6	3.969	53	76	11	116	64	58	5.5	9.5	5.5	M6	4.8x1	2711	7268	78
DFV 02508-4.8	25	8	4.762	56	85	13	134	71	64	6.5	11.0	6.5	M6	4.8x1	3466	8776	82
DFV 02510-2.7	25	10	6.350	68	102	15	130	84	82	9.0	14.0	8.5	M8	2.7x1	3040	6547	49
DFV 03204-4.8	32	4	2.381	54	81	12	94	67	64	6.6	11.0	6.5	M6	4.8x1	1517	5806	85
DFV 03206-4.8	32	6	3.969	62	89	12	114	75	68	6.6	11.0	6.5	M8	4.8x1	3079	9575	95
DFV 03208-4.8	32	8	4.762	66	100	15	139	82	76	9.0	14.0	8.5	M8	4.8x1	3962	11547	100
DFV 03220-2.7	32	20	6.350	74	108	16	200	90	82	9.0	14.0	8.5	M8	2.7x1	3509	8644	61
DFV 04020-2.7	40	20	6.350	82	124	18	200	102	90	11.0	17.5	11.0	M8	2.7x1	3935	10893	74
DFV 05005-4.8	50	5	3.175	80	114	15	115	96	82	9.0	14.0	8.5	M8	4.8x1	2698	12053	122
DFV 05020-2.7	50	20	9.525	105	152	28	221	128	110	14.0	20.0	13.0	M8	2.7x1	7336	19700	90
DFV 06320-2.7	63	20	9.525	122	180	28	220	150	130	18.0	26.0	17.5	M8	2.7x1	8162	24741	107
DFV 08020-4.8	80	20	9.525	143	204	28	340	172	148	18.0	26.0	18.0	M8	4.8x1	15103	57296	226
DFV 08020-7.6	80	20	9.525	143	204	28	460	172	148	18.0	26.0	18.0	M8	3.8x2	22423	90719	351

※ 双螺帽下单前请询问 Cromsteel 业务人员.

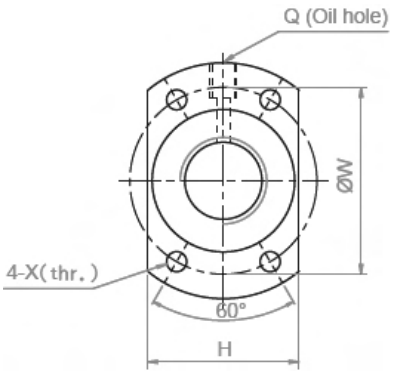

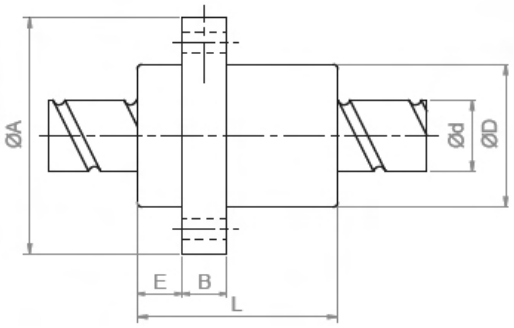

螺帽编号	螺杆外径	导程	钢珠直径	螺帽参数										基本额定负荷		K
														动负荷	静负荷	
	d	l	Da	D	A	E	B	L	W	H	X	Q	n	Ca	Coa	
				mm										kgf		kgf/μm
SFY 01616-3.6	16	16	2.778	32	53	10.1	10	45.0	42	34	4.5	M6	1.8x2	1073	2551	31
SFY 01616-5.6	16	16	2.778	32	53	10.1	10	61.0	42	34	4.5	M6	2.8x2	1568	3968	47
SFY 02020-3.6	20	20	3.175	39	62	13.0	10	52.0	50	41	5.5	M6	1.8x2	1387	3515	37
SFY 02020-5.6	20	20	3.175	39	62	13.0	10	72.0	50	41	5.5	M6	2.8x2	2029	5468	56
SFY 02525-3.6	25	25	3.969	47	74	15.0	12	64.0	60	49	6.6	M6	1.8x2	2074	5494	45
SFY 02525-5.6	25	25	3.969	47	74	15.0	12	89.0	60	49	6.6	M6	2.8x2	3032	8546	69
SFY 03232-3.6	32	32	4.762	58	92	17.0	12	78.0	74	60	9.0	M6	1.8x2	3021	8690	58
SFY 03232-5.6	32	32	4.762	58	92	17.0	12	110.0	74	60	9.0	M6	2.8x2	4417	13517	88
SFY 04040-3.6	40	40	6.350	73	114	19.5	15	99.0	93	75	11.0	M6	1.8x2	4831	14062	70
SFY 04040-5.6	40	40	6.350	73	114	19.5	15	139.0	93	75	11.0	M6	2.8x2	7065	21874	106
SFY 05050-3.6	50	50	7.938	90	135	21.5	20	117.0	112	92	14.0	M6	1.8x2	7220	21974	86
SFY 05050-5.6	50	50	7.938	90	135	21.5	20	167.0	112	92	14.0	M6	2.8x2	10558	34182	131
SFY 01632-1.6	16	32	2.778	32	53	10.1	10	42.5	42	34	4.5	M6	0.8x2	493	1116	11
SFY 01632-3.6	16	32	2.778	32	53	10.1	10	74.5	42	34	4.5	M6	1.8x2	989	2511	23
SFY 02040-1.6	20	40	3.175	39	62	13.0	10	48.0	50	41	5.5	M6	0.8x2	653	1597	15
SFY 02040-3.6	20	40	3.175	39	62	13.0	10	88.0	50	41	5.5	M6	1.8x2	1311	3592	30
SFY 02550-1.6	25	50	3.969	47	74	15.0	12	58.0	60	49	6.6	M6	0.8x2	976	2495	19
SFY 02550-3.6	25	50	3.969	47	74	15.0	12	108.0	60	49	6.6	M6	1.8x2	1960	5614	32
SFY 03264-1.6	32	64	4.762	58	92	17.0	12	71.0	74	60	9.0	M6	0.8x2	1374	3571	22
SFY 03264-3.6	32	64	4.762	58	92	17.0	12	135.0	74	60	9.0	M6	1.8x2	2759	8441	46
SFY 04080-1.6	40	80	6.350	73	114	19.5	15	90.0	93	75	11.0	M6	0.8x2	2273	6387	29
SFY 04080-3.6	40	80	6.350	73	114	19.5	15	170.0	93	75	11.0	M6	1.8x2	4566	14370	50
SFY 050100-1.6	50	100	7.938	90	135	21.5	20	111.0	112	92	14.0	M6	0.8x2	3398	9980	35
SFY 050100-3.6	50	100	7.938	90	135	21.5	20	211.0	112	92	14.0	M6	1.8x2	6824	22455	72

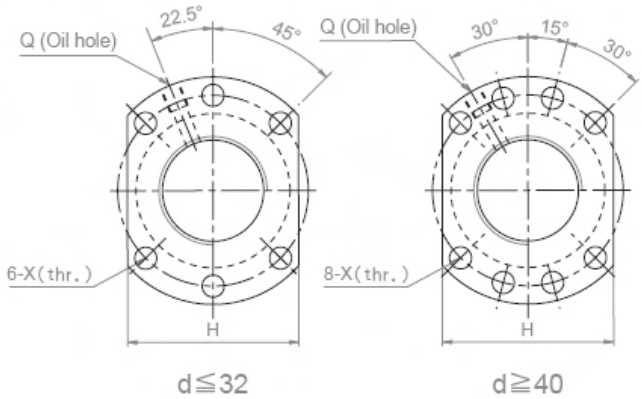

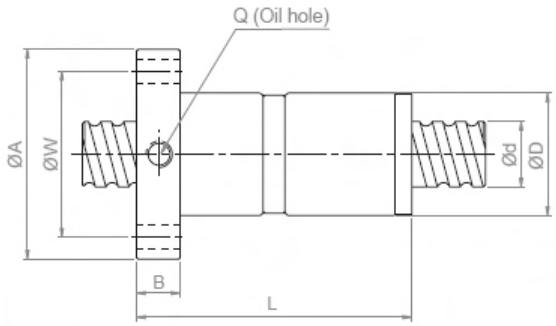

螺帽编号	螺杆外径	导程	钢珠直径	螺帽参数									基本额定负荷		K
													动负荷	静负荷	
	d	l	Da	D	A	B	L	W	H	X	Q	n	Ca	Coa	
								mm					kgf		kgf/μm
DFS 01605-3.8	15	5	2.778	28	48	10	73	38	40	5.5	M6	3.8x1	1112	2507	41
DFS 01610-2.8	15	10	2.778	28	48	10	97	38	40	5.5	M6	2.8x1	839	1821	31
DFS 02005-3.8	20	5	3.175	36	58	10	75	47	44	6.6	M6	3.8x1	1484	3681	50
DFS 02010-3.8	20	10	3.175	36	58	10	120	47	44	6.6	M6	3.8x1	1516	3833	53
DFS 02505-3.8	25	5	3.175	40	62	10	75	51	48	6.6	M6	3.8x1	1650	4658	59
DFS 02510-3.8	25	10	3.175	40	62	12	122	51	48	6.6	M6	3.8x1	1638	4633	61
DFS 03205-3.8	32	5	3.175	50	80	12	82	65	62	9.0	M6	3.8x1	1839	6026	71
DFS 03210-3.8	31	10	3.969	50	80	13	122	65	62	9.0	M6	3.8x1	2460	7255	75
DFS 03220-2.8	31	20	3.969	50	80	12	160	65	62	9.0	M6	2.8x1	1907	5482	58
DFS 04005-3.8	40	5	3.175	63	93	15	85	78	70	9.0	M8	3.8x1	2018	7589	83
DFS 04010-3.8	38	10	6.350	63	93	14	123	78	70	9.0	M8	3.8x1	5035	13943	91
DFS 04020-2.8	38	20	6.350	63	93	14	162	78	70	9.0	M8	2.8x1	3959	10715	73
DFS 05005-3.8	50	5	3.175	75	110	15	85	93	85	11.0	M8	3.8x1	2207	9542	96
DFS 05010-3.8	48	10	6.350	75	110	18	138	93	85	11.0	M8	3.8x1	5638	17852	109

※ 双螺帽下单前请询问 Cromsteel 业务人员.

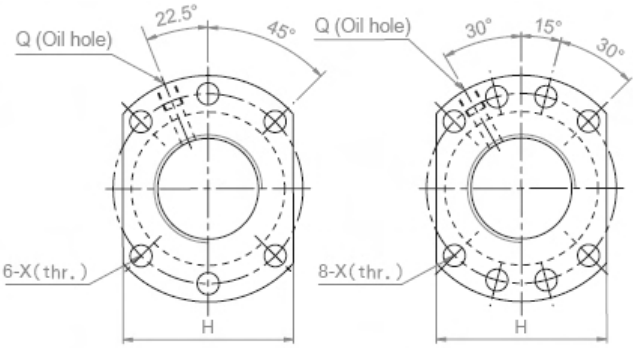

d≦32　　d≧40

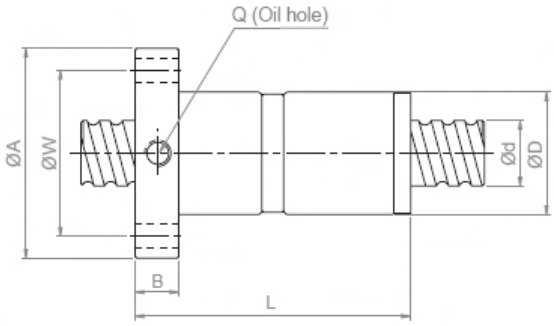

螺帽编号	螺杆外径	导程	钢珠直径	螺帽参数							基本额定负荷		K
											动负荷	静负荷	
	d	I	Da	D	L	L1	L2	M	R	n	Ca	Coa	
							mm				kgf		kgf/μm
SCNI 01605-4	16	5	3.175	30	45	9	20	5	3.0	1x4	1380	3052	33
SCNI 02005-4	20	5	3.175	34	45	9	20	5	3.0	1x4	1551	3875	39
SCNI 02505-4	25	5	3.175	40	45	9	20	5	3.0	1x4	1724	4904	45
SCNI 02510-4	25	10	4.762	46	85	13	30	5	3.0	1x4	2954	7295	51
SCNI 03205-4	32	5	3.175	46	45	9	20	5	3.0	1x4	1922	6343	52
SCNI 03210-4	32	10	6.350	54	85	13	30	5	3.0	1x4	4805	12208	62
SCNI 04005-4	40	5	3.175	56	45	9	20	5	3.0	1x4	2110	7988	59
SCNI 04010-4	40	10	6.350	62	85	13	30	5	3.0	1x4	5399	15500	72
SCNI 05010-4	50	10	6.350	72	85	13	30	5	3.0	1x4	6004	19614	83
SCNI 06310-4	63	10	6.350	85	85	13	30	6	3.5	1x4	6719	25358	95
SCNI 08010-4	80	10	6.350	105	85	13	30	8	4.5	1x4	7346	31953	109
SCI 01604-4	16	4	2.381	30	40	9	15	3	1.5	1x4	973	2406	32
SCI 02004-4	20	4	2.381	34	40	9	15	3	1.5	1x4	1066	2987	37
SCI 02504-4	25	4	2.381	40	40	9	15	3	1.5	1x4	1180	3795	43
SCI 03204-4	32	4	2.381	46	40	9	15	3	1.5	1x4	1296	4838	49

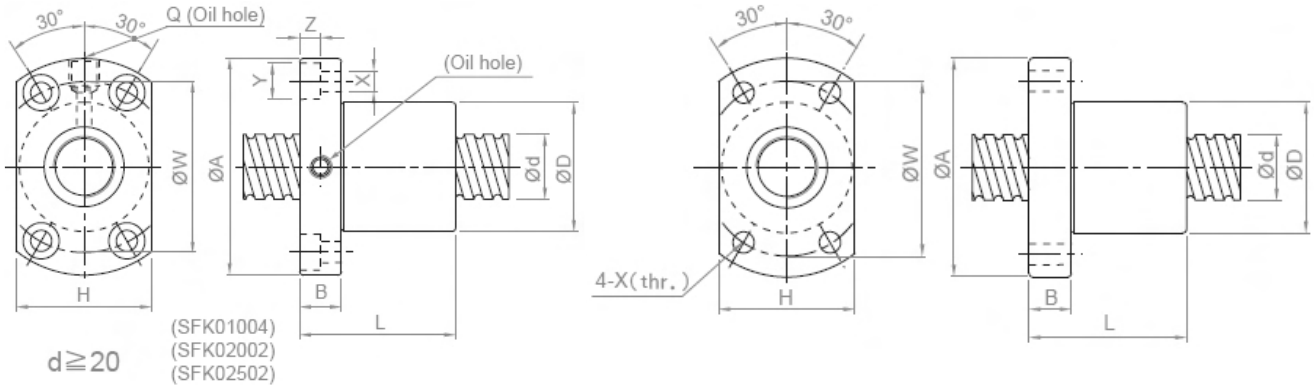

螺帽编号	螺杆外径 d	导程 l	钢珠直径 Da	螺帽参数 D	A	B	L	W	H	X	Y	Z	Q	n	基本额定负荷 动负荷 Ca	静负荷 Coa	K
									mm						kgf		kgf/μm
SFK00401	4	1.0	0.8	10	20	3.0	12	15	14	2.9	-	-	-	1x2	64	97	5
SFK00601	6	1.0	0.8	12	24	3.5	15	18	16	3.4	-	-	-	1x3	111	224	9
SFK00801☆	8	1.0	0.8	14	27	4.0	16	21	18	3.4	-	-	-	1x4	161	403	14
SFK00802☆	8	2.0	1.2	14	27	4.0	16	21	18	3.4	-	-	-	1x3	222	458	13
SFK0082.5	8	2.5	1.2	16	29	4.0	26	23	20	3.4	-	-	-	1x3	221	457	13
SFK01002☆	10	2.0	1.2	18	35	5.0	28	27	22	4.5	-	-	-	1x3	243	569	15
SFK01004	10	4.0	2.0	26	46	10.0	34	36	28	4.5	8	4.5	M6	1x3	468	905	17
SFK01202☆	12	2.0	1.2	20	37	5.0	28	29	24	4.5	-	-	-	1x4	334	906	22
SFK01402☆	14	2.0	1.2	21	40	6.0	23	31	26	5.5	-	-	-	1x4	354	1053	24
SFK01602☆	16	2.0	1.2	25	43	10.0	40	35	29	5.5	-	-	M6	1x4	373	1200	26
SFK02002	20	2.0	1.2	50	80	15.0	55	65	68	6.5	10.5	6	M6	1x6	581	2284	48
SFK02502	25	2.0	1.2	50	80	13.0	43	65	68	6.5	10.5	6	M6	1x5	540	2381	46

※ 有标注 ★ 记号者可制作左螺纹.

螺帽编号	螺杆外径 d	导程 l	钢珠直径 Da	螺帽参数 D	A	B	L	W	H	X	Y	Z	Q	n	基本额定负荷 动负荷 Ca	静负荷 Coa	K
									mm						kgf		kgf/μm
XSUR 01204T3D-02	12	4	2.5	24	40	6	28	32	25	3.5	-	-	-	1x3	704	1413	-
XSUR 01205T3D-00	12	5	2.5	22	37	8	39	29	24	4.5	-	-	-	1x3	702	1409	17

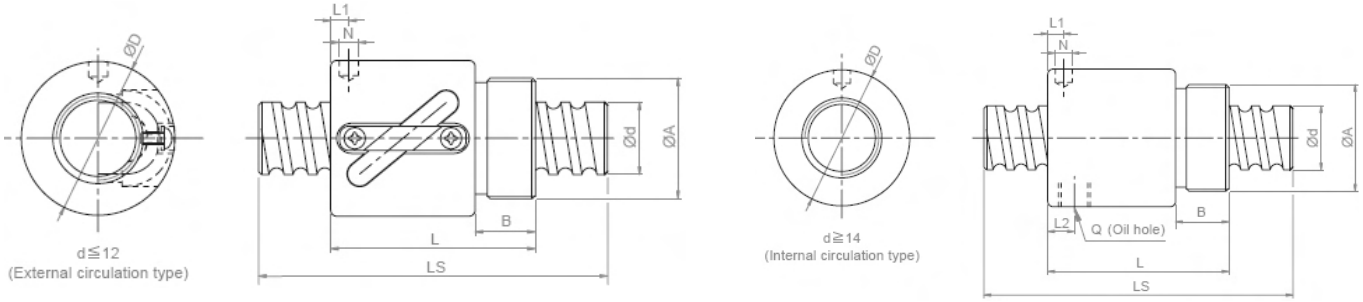

螺帽编号	螺杆外径	导程	钢珠直径	螺帽参数									基本额定负荷		K
													动负荷	静负荷	
	d	*I*	*Da*	*D*	*A*	*B*	*L*	*L1*	*N*	*L2*	*Q*	*n*	*Ca*	*Coa*	
								mm					kgf		kgf/μm
BSHR 0082.5-2.5	8	2.5	1.200	17.5	M15x1P	7.5	23.5	10.00	3.0	-	-	2.5x1	189	381	11
BSHR 01002-3.5	10	2	1.200	19.5	M17x1P	7.5	22.0	3.00	3.2	-	-	3.5x1	277	664	17
BSHR 01004-2.5	10	4	2.000	25.0	M20x1P	10.0	34.0	3.00	3.0	-	-	2.5x1	400	754	14
BSHR 01204-3.5	12	4	2.500	25.5	M20x1P	10.0	34.0	13.00	3.0	-	-	3.5x1	804	1649	23
BSHR 01205-3.5	12	5	2.500	25.5	M20x1P	10.0	39.0	16.25	3.0	-	-	3.5x1	801	1644	24
BSHR 01404-3	14	4	2.500	32.1	M25x1.5P	10.0	35.0	11.00	3.0	-	-	1x3	748	1609	26
BSHR 01604-3	16	4	2.381	29.0	M22x1.5P	8.0	32.0	4.00	3.2	-	-	1x3	759	1804	24
BSHR 01605-3	16	5	3.175	32.5	M26x1.5P	12.0	42.0	19.25	3.0	-	-	1x3	1077	2289	25
BSHR 01610-2	16	10	3.175	32.0	M26x1.5P	12.0	50.0	3.00	4.0	-	-	1x2	779	1601	14
BSHR 02005-3	20	5	3.175	38.0	M35x1.5P	15.0	45.0	20.30	3.0	-	-	1x3	1211	2906	30
BSHR 02505-4	25	5	3.175	43.0	M40x1.5P	19.0	69.0	32.11	3.0	-	-	1x4	1724	4904	37
BSHR 02510-4	25	10	4.762	43.0	M40x1.5P	19.0	84.0	8.00	6.0	-	-	1x4	2954	7295	41

※ 外径 8 ~ 16 螺帽标准品无附刮刷器.

PART D

螺杆支撑座

Ballscrews Support

建议轴端尺寸(固定侧) - BK. WBK. EK

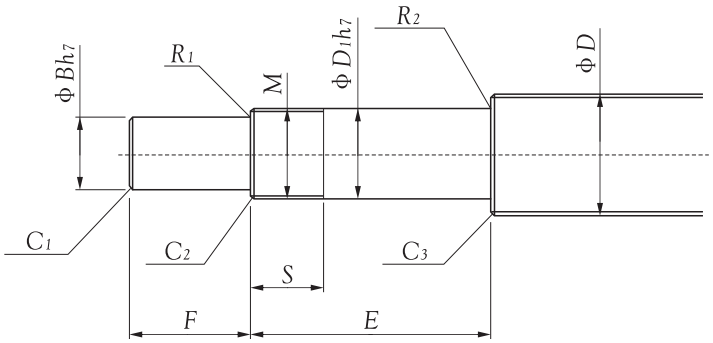

型号	基本尺寸						
	滚珠螺杆轴外径 D	轴承部轴外径 D1	B	E	F	公称螺纹 M	S
				mm			
BK-10	12/14/15	10	8	39	15	M10x1	16
BK-12	14/15/16/18	12	10	39	15	M12x1	14
BK-15	18/20	15	12	40	20	M15x1	12
BK-17	20/25	17	15	53	23	M17x1	17
BK-20	25/28	20	16	53	25	M20x1	15
BK-25	32/36	25	20	65	30	M25x1.5	18
BK-30	36/40	30	25	72	38	M30x1.5	25
BK-35	40/45/50	35	30	83	45	M35x1.5	28
BK-40	50/55	40	35	98	50	M40x1.5	35

型号		基本尺寸						
		滚珠螺杆轴外径 D	轴承部轴外径 D1	B	E	F	公称螺纹 M	S
					mm			
WBK-6	EK-6	8/10(6/8)	6(8)	4	30	8	M6x0.75	8
WBK-8	EK-8	10/12	8	6	35	9	M8x1	10
WBK-10	EK-10	12/14/15	10	8	36	15	M10x1	11
WBK-12	EK-12	14/15/16	12	10	36	15	M12x1	11
WBK-15	EK-15	18/20	15	12	49	20	M15x1	13
WBK-20	EK-20	25/28	20	17	64	25	M20x1	17
WBK25	-	36	25	20	76	30	M25x1.5	20
WBK30	-	40/45	30	25	72	38	M30x1.5	25

注：( ) 内为EK尺寸.

建议轴端尺寸(支持侧) - WBF. EF. BF.Before

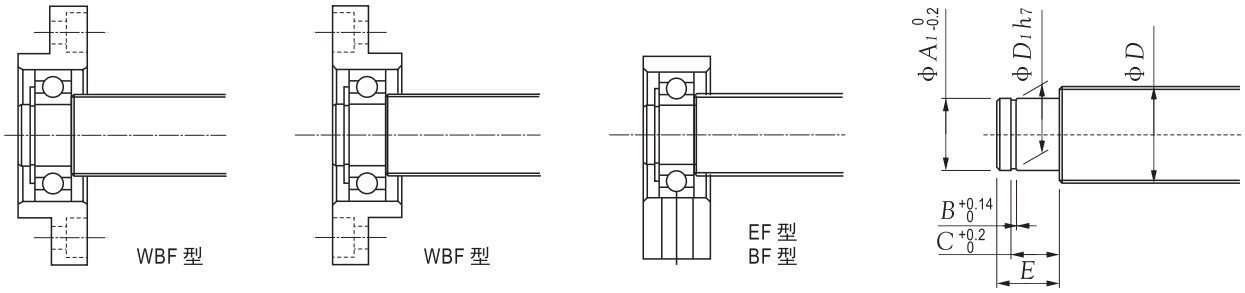

型号			滚珠螺杆轴外径 D	轴承部轴外径 D1
			mm	
WBF-6	EF-6	-	10/12(6/8)	6
-	EF-8	-	10/12	6
WBF-10	EF-10	BF-10	12/14/15	8
WBF-12	EF-12	BF-12	14/15/16	10
WBF-15	EF-15	BF-15	18/20	15
-	-	BF-17	20/25	17
WBF-20	EF-20	BF-20	25/28	20
WBF-25	-	BF-25	32/36	25
WBF-30	-	BF-30	36/40	30
-	-	BF-35	40/45/50	35
-	-	BF-40	50/55	40

注：( ) 内为EF尺寸.

型号		扣环沟槽			
		E	A	C	B
		mm			
EF-6	WBF-6	9	5.7	6.8	0.8
EF-8	-	9	5.7	6.8	0.8
EF-10	WBF-10	10	7.6	7.9	0.9
EF-12	WBF-12	11	9.6	9.15	1.15
EF-15	WBF-15	13	14.3	10.15	1.15
EF-20	WBF-20	19	19	15.35	1.35
-	WBF-25	20	23.9	16.35	1.35
-	WBF-30	21	28.6	17.75	1.75

型号	扣环沟槽			
	E	A	C	B
	mm			
BF-10	10	7.6	7.9	0.9
BF-12	11	9.6	9.15	1.15
BF-15	13	14.3	10.15	1.15
BF-17	16	16.2	13.15	1.15
BF-20	16	19	13.35	1.35
BF-25	20	23.9	16.35	1.35
BF-30	21	28.6	17.75	1.75
BF-35	22	33	18.75	1.75
BF-40	23	38	19.95	1.95

Fixed Support Side

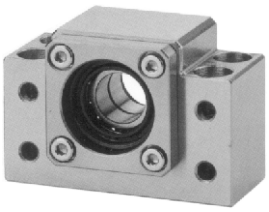

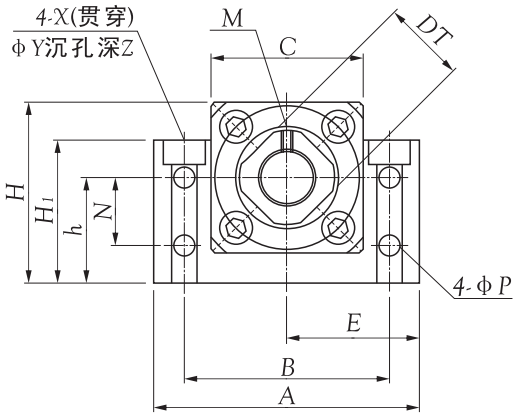

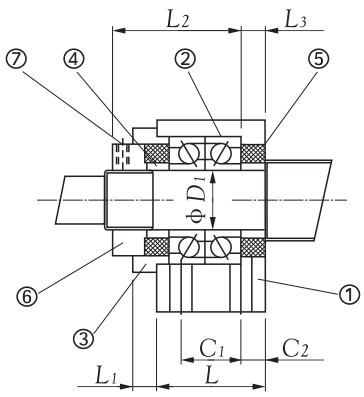

① 轴承座 x 1　② 轴承 x 1 set　③ 压盖 x 1　④ 间隔环 x 2
⑤ 油封 x 2　⑥ 固定螺帽 x 1　⑦ 防松小螺栓(附铜垫片) x 1

型号	基本尺寸																		
	D_1	L	L_1	L_2	L_3	C_1	C_2	A	H	$E^{\pm0.02}$	$h^{\pm0.02}$	C	H_1	N	B	P	X	Y	Z
	mm																		
BK-10	10	25	6	29	5	13	6	60	39	30	22	34	32.5	15	46	5.5	6.6	11	5
BK-12	12	25	6	29	5	13	6	60	43	30	25	35	32.5	18	46	5.5	6.6	11	6.5
BK-15	15	27	6	32	6	15	6	70	48	35	28	40	38	18	54	5.5	6.6	11	6.5
BK-17	17	35	9	44	7	19	8	86	64	43	39	50	55	28	68	6.6	9	14	8.5
BK-20	20	35	8	43	8	19	8	88	60	44	34	52	50	22	70	6.6	9	14	8.5
BK-25	25	42	12	54	9	22	10	106	80	53	48	64	70	33	85	9	11	17.5	11
BK-30	30	45	14	61	9	23	11	128	89	64	51	76	78	33	102	11	14	20	13
BK-35	35	50	14	67	12	26	12	140	96	70	52	88	79	35	114	11	14	20	13
BK-40	40	61	18	76	15	33	14	160	110	80	60	100	90	37	130	14	18	26	17.5

Simple Support Side

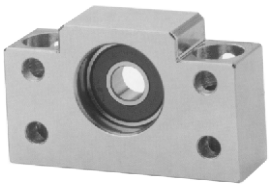

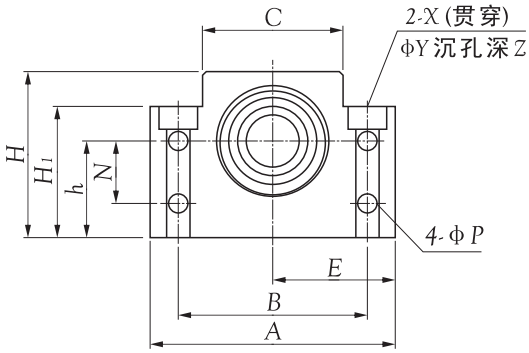

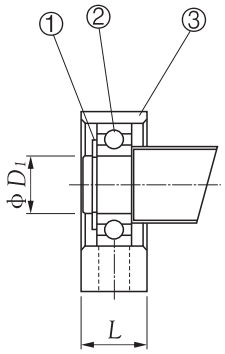

① 轴承座 x 1　　② 轴承 x 1　　③ C型扣环 x 1

型号	基本尺寸													
	D_1	L	A	H	$E^{\pm0.02}$	$h^{\pm0.02}$	C	H_1	N	B	P	X	Y	Z
	mm													
BF-10	8	20	60	39	30	22	34	32.5	15	46	5.5	6.6	11	5
BF-12	10	20	60	43	30	25	35	32.5	18	46	5.5	6.6	11	6.5
BF-15	15	20	70	48	35	28	40	38	18	54	5.5	6.6	11	6.5
BF-17	17	23	86	64	43	39	50	55	28	68	6.6	9	14	8.5
BF-20	20	26	88	60	44	34	52	50	22	70	6.6	9	14	8.5
BF-25	25	30	106	80	53	48	64	70	33	85	9	11	17.5	11
BF-30	30	32	128	89	64	51	76	78	33	102	11	14	20	13
BF-35	35	32	140	96	70	52	88	79	35	114	11	14	20	13
BF-40	40	37	160	110	80	60	100	90	37	130	14	18	26	17.5

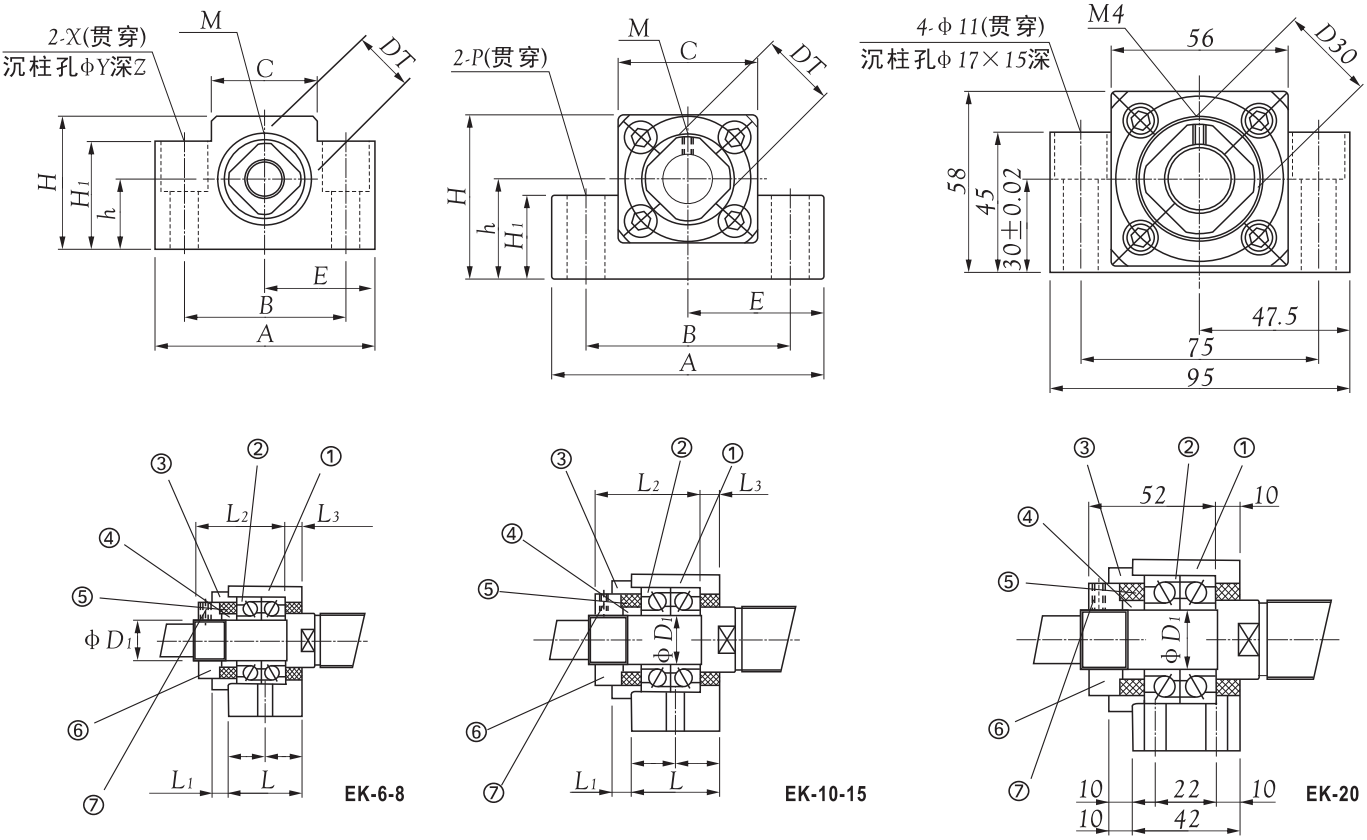

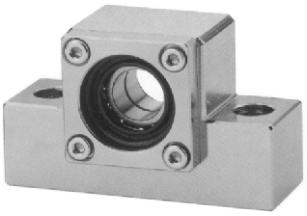

① 轴承座 x 1　② 轴承 x 1 set　③ 压盖 x 1　④ 间隔环 x 2
⑤ 油封 x 2　⑥ 固定螺帽 x 1　⑦ 防松小螺栓 (附铜垫片) x 1

型号	基本尺寸														
	D_1	L	L_1	L_2	L_3	A	H	$E^{\pm0.02}$	$h^{\pm0.02}$	C	H_1	B	X	Y	Z
	mm														
EK-6	6	20	5.5	22	3.5	42	25	21	13	18	20	30	5.5	9.1	11
EK-8	8	23	7	26	4	52	32	26	17	25	26	38	6.6	11	12
EK-10	10	24	6	29.5	6	70	43	35	25	36	24	52	9	-	-
EK-12	12	24	6	29.5	6	70	43	35	25	36	24	52	9	-	-
EK-15	15	25	6	36	5	80	49	40	30	41	25	60	11	-	-
EK-20	20	42	10	50	10	95	58	47.5	30	56	45	75	11	17	15

Simple Support Side

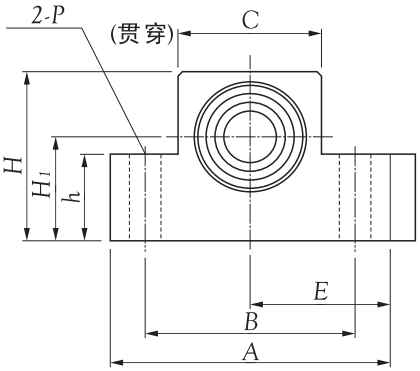

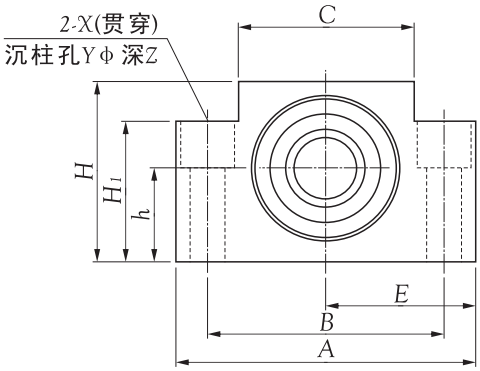

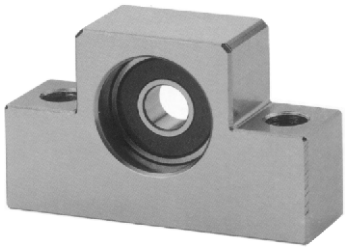

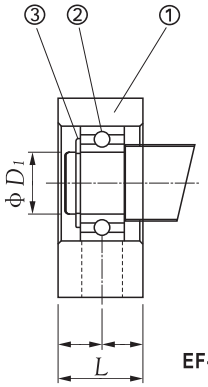

EF-10-15

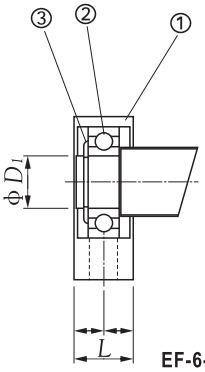

EF-6-8 EF-20

① 轴承座 x 1　　② 轴承 x 1set　　③ C型扣环 x 1

型号	基本尺寸												
	D_1	L	A	H	$E^{\pm0.02}$	$h^{\pm0.02}$	C	H_1	B	P	X	Y	Z
							mm						
EF-6	6	12	42	25	21	13	18	20	30	-	5.5	9.5	11
EF-8	6	14	52	32	26	17	25	26	38	-	6.6	11	12
EF-10	8	20	70	43	35	25	36	24	52	9	-	-	-
EF-12	10	20	70	43	35	25	36	24	52	9	-	-	-
EF-15	15	20	80	49	40	30	41	25	60	9	-	-	-
EF-20	20	26	95	58	47.5	30	56	45	75	-	11	17	15

Fixed Support Side

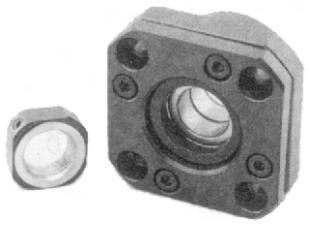

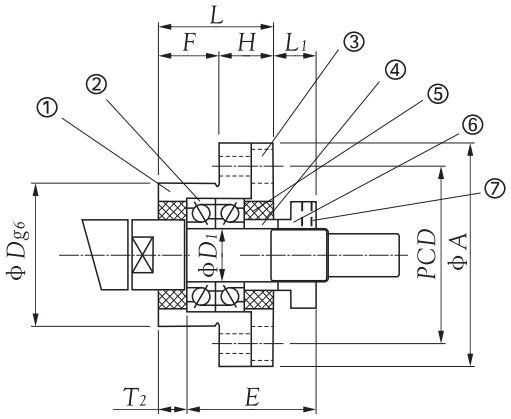

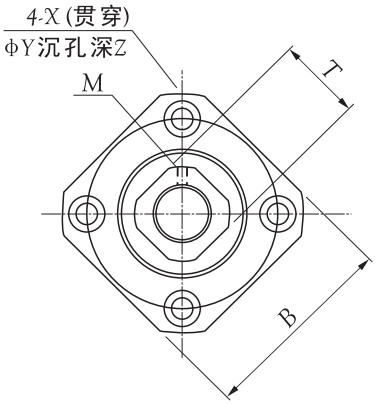

① 轴承座 x 1　② 轴承 x 1 set　③ 压盖 x 1　④ 间隔环 x 2
⑤ 油封 x 2　⑥ 固定螺帽 x 1　⑦ 防松小螺栓 (附铜垫片) x 1

型号	基本尺寸													
	D_1	L	H	F	E	D_{g6}	A	PCD	B	L1	T1	X	Y	Z
	mm													
WBK-6	6	20	7	13	22	22	36	28	28	5.5	3.5	3.4	6.5	4
WBK-8	8	23	9	14	26	28	43	35	35	7	4	3.4	6.5	4
WBK-10	10	27	10	17	29.5	34	52	42	42	7.5	5	4.5	8	4
WBK-12	12	27	10	17	29.5	36	54	44	44	7.5	5	4.5	8	4
WBK-15	15	32	15	17	36	40	63	50	52	10	6	5.5	9.5	6
WBK-20	20	52	22	30	50	57	85	70	68	8	10	6.6	11	10
WBK-25	25	57	27	30	60	63	98	80	79	13	10	9	15	13
WBK-30	30	62	30	32	61	75	117	95	93	11	12	11	17.5	15

Simple Support Side

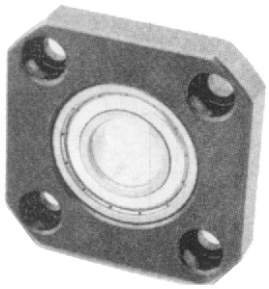

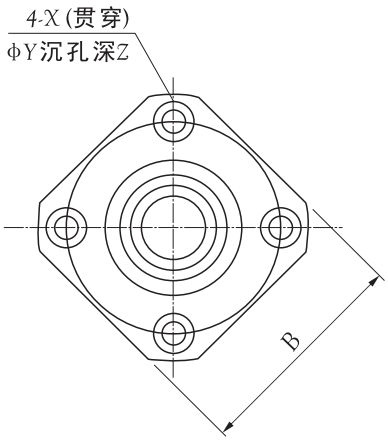

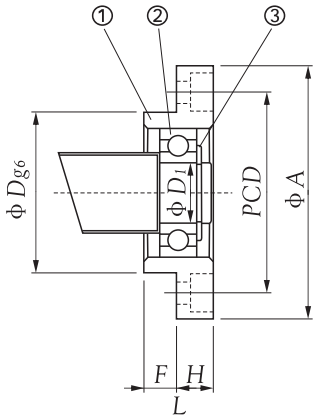

① 轴承座 x 1　　② 轴承 x 1　　③ C型扣环 x 1

型号	基本尺寸										
	D_1	L	H	F	D	A	PCD	B	X	Y	Z
						mm					
WBF-6	6	10	6	4	22	36	28	28	3.4	6.5	4
WBF-10	8	12	7	5	28	43	35	35	3.4	6.5	4
WBF-12	10	15	7	8	34	52	42	42	4.5	8	4
WBF-15	15	17	9	8	40	63	50	52	5.5	9.5	5.5
WBF-20	20	20	11	9	57	85	70	68	6.6	11	6.5
WBF-25	25	24	14	10	63	98	80	79	9	14	8.5
WBF-30	30	27	18	9	75	117	95	93	11	17.5	11

Fixed support side WBK..DF

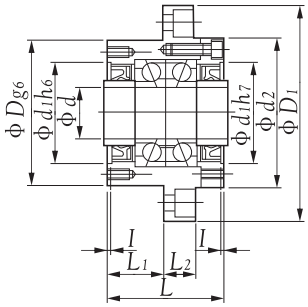

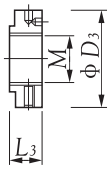

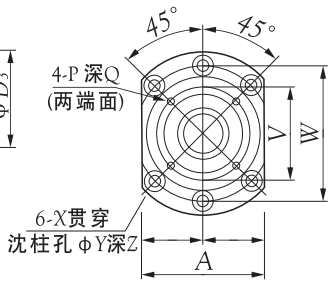

轴径 ≤30

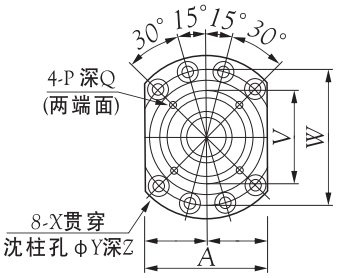

轴径 ≥35

型号	基本尺寸																	固定螺帽		
	d	Dg6	D1	D2	L	L1	L2	I	W	A	X	Y	Z	d1	V	P	Q	M	D3	L3
	mm																	mm		
WBK-17DF	17	72	106	70	60	32	15	3	88	80	9	14	8.5	45	58	M5	10	M17x1.0	37	18
WBK-20DF	20	72	106	70	60	32	15	3	88	80	9	14	8.5	45	58	M5	10	M20x1.0	40	18
WBK-25DF	25	90	130	85	66	33	18	4	110	100	11	17.5	11	57	70	M6	12	M25x1.5	45	20
WBK-30DF	30	90	130	85	66	33	18	4	110	100	11	17.5	11	57	70	M6	12	M30x1.5	50	20
WBK-35DF	35	95	142	102	66	33	18	4	121	106	11	17.5	11	69	80	M6	12	M35x1.5	55	22
WBK-40DF	40	95	142	102	66	33	18	4	121	106	11	17.5	11	69	80	M6	12	M40x1.5	60	22

表面处理：WBK 型染黑　WBK-N 型无电解线

轴端加工尺寸

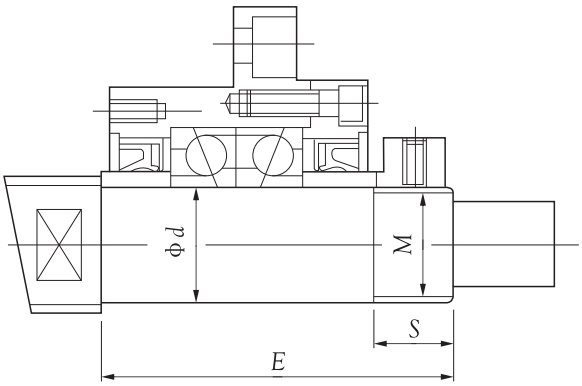

型号	适用轴杆外径	基本尺寸			
		d	E	M	S
		mm			
WBK-17DF	ϕ20, ϕ25	17	81	M17x1.0	23
WBK-20DF	ϕ25, ϕ28	20	81	M20x1.0	23
WBK-25DF	ϕ32, ϕ36	25	89	M25x1.5	26
WBK-30DF	ϕ36, ϕ40, ϕ45	30	89	M30x1.5	26
WBK-35DF	ϕ40, ϕ45, ϕ50	35	92	M35x1.5	30
WBK-40DF	ϕ50	40	92	M40x1.5	30

尺寸区分	轴承尺寸容许差			
	g6		h	
	unit 0.001			
WBK-17DF	ϕ70	-0.010 -0.029	ϕ17	-0.003 -0.011
WBK-20DF	ϕ70	-0.010 -0.029	ϕ20	-0.003 -0.012
WBK-25DF	ϕ85	-0.012 -0.034	ϕ25	-0.003 -0.012
WBK-30DF	ϕ85	-0.012 -0.034	ϕ30	-0.004 -0.015
WBK-35DF	ϕ95	-0.012 -0.034	ϕ35	-0.004 -0.015
WBK-40DF	ϕ95	-0.012 -0.034	ϕ40	-0.004 -0.015

Fixed support side WBK..DFD

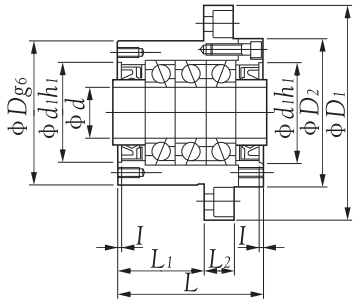

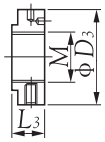

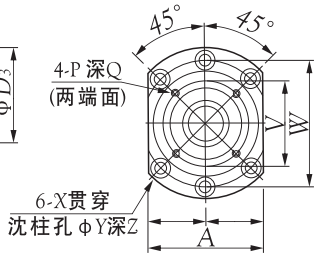

轴径≤30

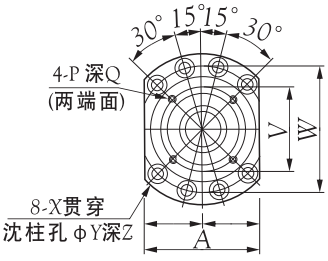

轴径≥35

型号	基本尺寸																	固定螺帽		
	d	*Dg6*	*D1*	*D2*	*L*	*L1*	*L2*	*I*	*W*	*A*	*X*	*Y*	*Z*	*d1*	*V*	*P*	*Q*	*M*	*D3*	*L3*
	mm																	mm		
WBK-25DFD	25	85	130	90	81	48	18	4	110	100	11	17.5	11	57	70	M6	12	M25x1.5	45	20
WBK-30DFD	30	85	130	90	81	48	18	4	110	100	11	17.5	11	57	70	M6	12	M30x1.5	50	20
WBK-35DFD	35	95	142	102	81	48	18	4	121	106	11	17.5	11	69	80	M6	12	M35x1.5	55	22
WBK-40DFD	40	95	142	102	81	48	18	4	121	106	11	17.5	11	69	80	M6	12	M40x1.5	60	22

轴端加工尺寸

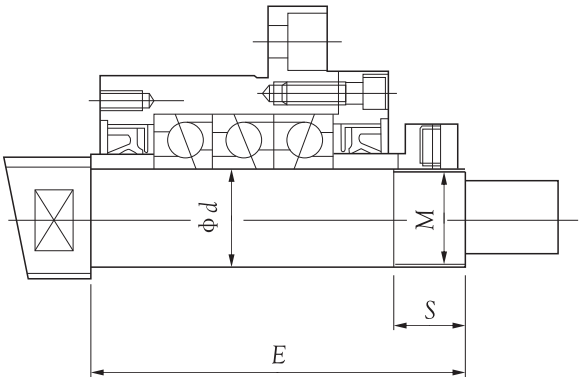

型号	适用轴杆外径	基本尺寸			
		d	*E*	*M*	*S*
		mm			
WBK-25DFD	Φ32, Φ36	25	104	M25x1.5	26
WBK-30DFD	Φ36, Φ40, Φ45	30	104	M30x1.5	26
WBK-35DFD	Φ40, Φ45, Φ50	35	107	M35x1.5	30
WBK-40DFD	Φ50	40	107	M40x1.5	30

尺寸区分	轴承尺寸容许差			
	g6		*h*	
	unit 0.001			
WBK-25DFD	Φ85	-0.012 -0.034	Φ25	-0.003 -0.012
WBK-30DFD	Φ85	-0.012 -0.034	Φ30	-0.004 -0.015
WBK-35DFD	Φ95	-0.012 -0.034	Φ35	-0.004 -0.015
WBK-40DFD	Φ95	-0.012 -0.034	Φ40	-0.004 -0.015

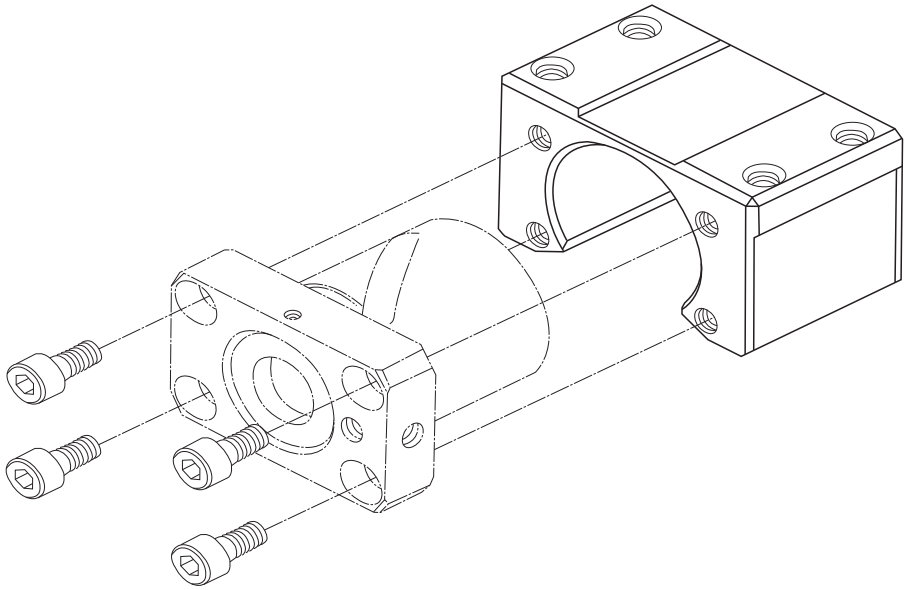

MC 型螺帽支持座为适合各厂牌滚珠螺杆之螺帽，无论是转造级或是精密级螺杆，均可适用。
MC 型螺帽支持座为标准规格。库存化，量产化，可降低机械结构的成本，以及节省人力的支出，
其高刚性、高精度及方便性为不可或缺的组合件。

MC Type brackets for ball screw assemblies are designed for high accuracy.
High reliability. High stiffness. Applicable any brand ball screw. Competitive price.

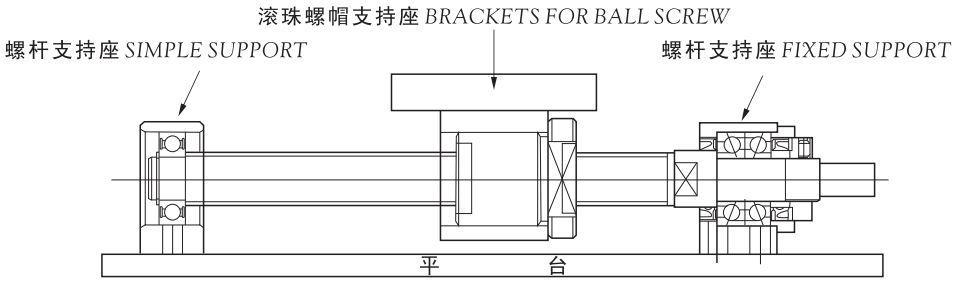

滚珠螺帽支持座直接与滚珠螺帽固定连结，在滚珠螺帽支持座高度尺寸0.5~1mm游隙与滚珠螺帽的调整，
可以取得较容易的取付方式，搭配滚珠螺杆与螺杆支撑座BK、EK，在中心高与垂直度的调整，以其得到
较高的付取精度。

MC type brackets for ball screw and ball screw can be compatibly changed and Easily attached by the
base support. Mc type brackets for ball screw have varied compact structure. Use Mc type brackets for ball
screw and support unit. Ease to getting with high positioning accuracy.

MC：滚珠螺帽支持座

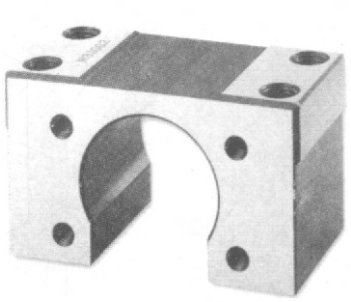

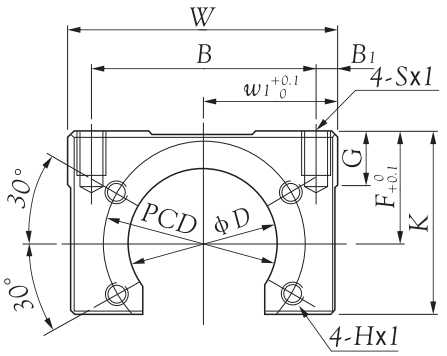

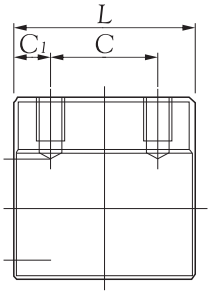

型号	基本尺寸													
	W	*W1*	*B*	*B1*	*L*	*C*	*C1*	*F*	*K*	*G*	*D*	*PCD*	*Hxl*	*Sxl*
								mm						
MC 1004	48	24	40	4	32	16	10	20	32.5	9	26.4	36	M4x7	M5x10
MC 1205	60	30	47	6.5	36	24	6	21	37	9	30.4	40	M4x7	M6x12
MC 1404	60	30	50	5	36	20	10	21.5	37	9	31.4	40	M4x8	M6x12
MC 1405	60	30	50	5	36	20	10	21.5	37	9	32.4	40	M4x8	M6x12
MC 1408	60	30	50	5	36	20	10	21.5	37	9	34.4	45	M5x7	M6x12
MC 1605	60	30	50	5	36	20	10	21.5	37	9	34.4	44	M4x8	M6x12
MC 2005	86	43	70	8	50	30	10	31	54	16	46.4	50	M4x8	M6x16
MC 2010	86	43	70	8	50	30	10	31	54	16	46.4	59	M6x10	M10x20
MC 2020	86	43	70	8	40	24	8	28	51	16	39.4	59	M6x10	M10x20

型号	THK	NSK	KURODA	HIWIN
MC 1004	BNK1004、BNK1010	PFT 1004、SFT 1004	GE1004-BAPR、GG1004-BAPR	
MC 1205	BNK1205	LSFT、LPFT1210 PFT、SFT1204 PFT、SFT1205	GY1204-HANR、GE1205-BALR GG1205-BALR	
MC 1404	BTK1404	RNFBL1404		
MC 1405	BTK1405	RNFBL1405		
MC 1408	BNK1408、BNK1510 BNK1520、BNK1616	USFC、UPFC1632 USFC、UPFC1520 LSFT、LPFT1408 LSFT、LPFT1510 PFT、SFT1405 PFT、SFT1604	GY1510-HULR、GY1520-HULR GE1505-BALR、GG1505-BALR GE1510-BALR、GG1510-BALR GE1515-BALR、GG1515-BALR GE1520-BALR、GG1520-BALR	FSW1510 FSV1616
MC 1605	BTK1605		GY1505-HULR	
MC 2005	BLK2020 BLK2005	RNFCL2020、RNFBL2005 USFC、UPFC2020	GY2005-HULR、GY2020-HULR	
MC 2010	BNK2010	LSFT、LPFT2010 LSFT、LPFT2016 LSFT、LPFT2020	GE2010-BALR、GG2010-BALR GE2020-BALR、GG2020-BALR	FSW2010 FSW2020
MC 2020	BNK2020			

RN：精密螺帽

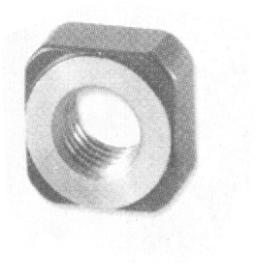

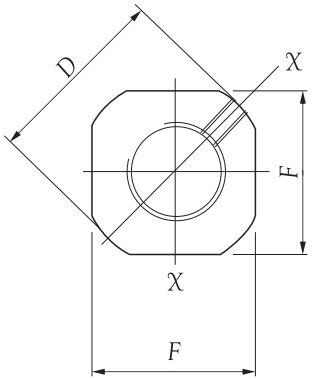

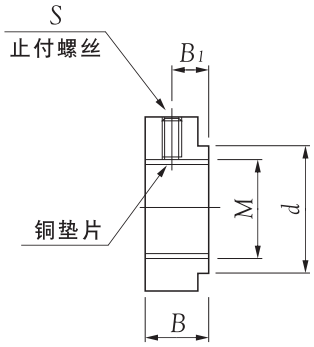

X-X 视图

型号	基本尺寸						
	M	D	F	B	d	B1	S
				mm			
RN-6	M6x0.75	14.5	12	5	10	2.7	M3 铜片内附
RN-8	M8x1	17	14	6.5	13	4	M3 铜片内附
RN-10	M10x1	20	16	8	15	5.5	M3 铜片内附
RN-12	M12x1	22	19	8	17	5.5	M3 铜片内附
RN-15	M15x1	25	22	8	21	4.5	M3 铜片内附
RN-17	M17x1	30	24	13	25	9	M4 铜片内附
RN-20	M20x1	35	30	11	26	7	M4 铜片内附
RN-25	M25x1.5	43	35	15	33	10	M5 铜片内附
RN-30	M30x1.5	48	40	20	39	14	M6 铜片内附
RN-35	M35x1.5	60	50	21	46	14	M8 铜片内附
RN-40	M40x1.5	63	50	25	51	18	M8 铜片内附

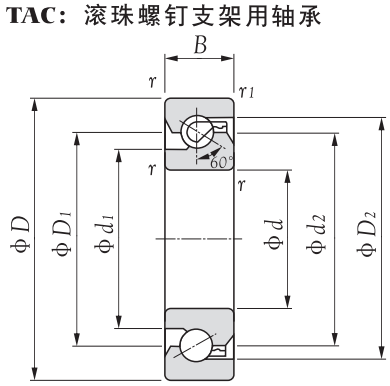

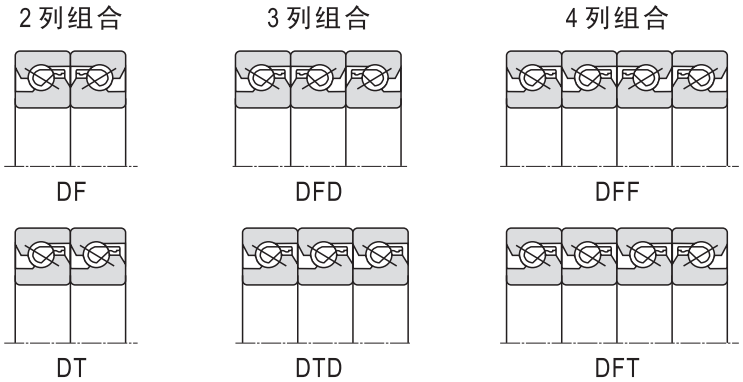

型号	主要尺寸					相关尺寸				容许转速		基本动额定负荷 Ca						重量
	d	D	B	r	r_1	d_1	d_2	D_1	D_2	润滑脂润滑	油润滑	以1列承受负荷时 DF		以2列承受负荷时 DT, DFD, DFF		以3列承受负荷时 DTD, DFT		
	mm			min.	min.	mm				rpm		(N)	(kgf)	(N)	(kgf)	(N)	(kgf)	kgf
17TAC47B	17	47	15	1	0.6	27.2	34	34	39.6	6000	8000	21900	2240	35500	3650	47500	4850	0.144
20TAC47B	20	47	15	1	0.6	27.2	34	34	39.6	6000	8000	21900	2240	35500	3650	47500	4850	0.135
25TAC62B	25	62	15	1	0.6	37	45	45	50.7	4500	6000	28500	2910	46500	4700	61500	6250	0.252
30TAC62B	30	62	15	1	0.6	39.5	47	47	53.2	4300	5600	29200	2980	47500	4850	63000	6400	0.224
35TAC72B	35	72	15	1	0.6	47	55	55	60.7	3600	5000	31000	3150	50500	5150	67000	6850	0.310
40TAC72B	40	72	15	1	0.6	49	57	57	62.7	3600	4800	31500	3250	51500	5250	68500	7000	0.275
40TAC90B	40	90	20	1	0.6	57	68	68	77.2	3000	4000	59000	6000	95500	9750	127000	13000	0.674
45TAC75B	45	75	15	1	0.6	54	62	62	67.7	3200	4300	33000	3350	53500	5450	71000	7250	0.270
45TAC100B	45	100	20	1	0.6	64	75	75	84.2	2600	3600	61500	6300	100000	10200	133000	13600	0.842
50TAC100B	50	100	20	1	0.6	67.5	79	79	87.7	2600	3400	63000	6400	102000	10400	136000	13800	0.778
55TAC100B	55	100	20	1	0.6	67.5	79	79	87.7	2600	3400	63000	6400	102000	10400	136000	13800	0.714
55TAC120B	55	120	20	1	0.6	82	93	93	102.2	2200	3000	67500	6850	109000	11200	145000	14800	1.230
60TAC120B	60	120	20	1	0.6	82	93	93	102.2	2200	3000	67500	6850	109000	11200	145000	14800	1.160

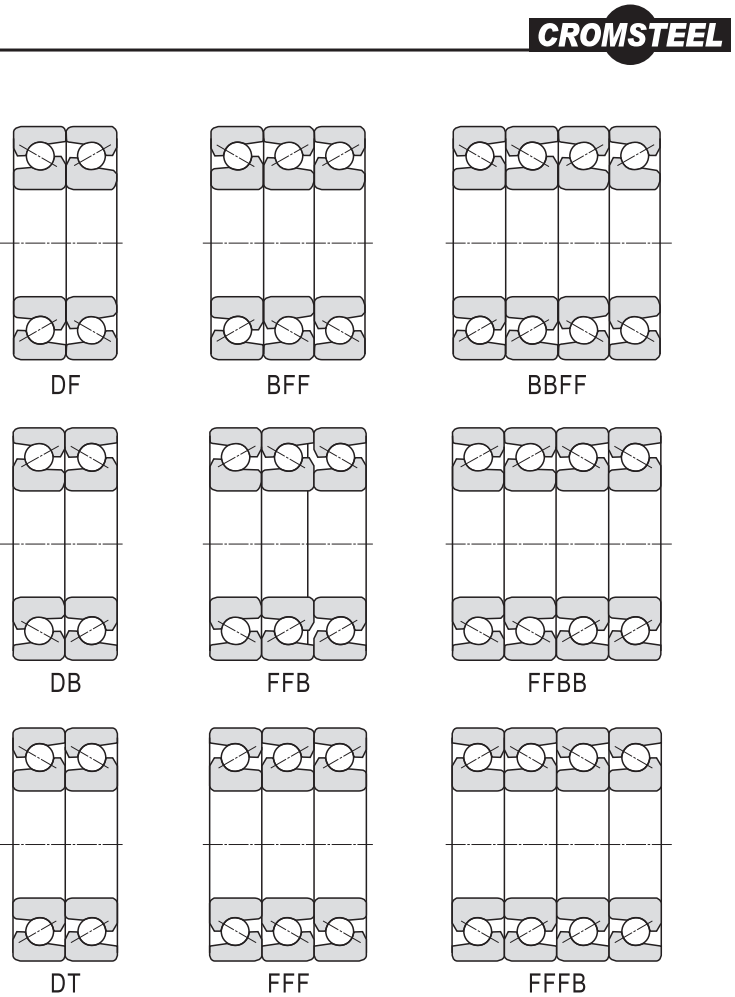

TAB：精密滚珠螺杆支持用轴承

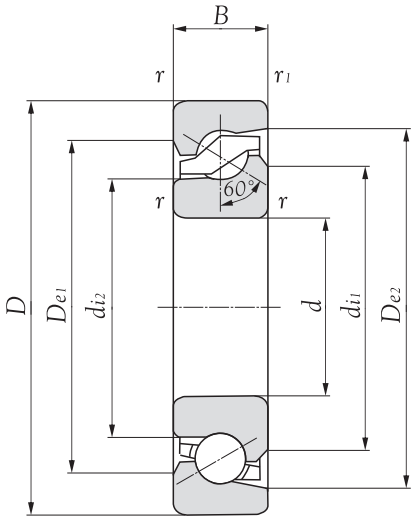

型号	主要尺寸					相关尺寸				容许转速	基本动额定负荷 Ca(N)			轴向限界荷重 (N)			重量
	d	*D*	*B*	*r*	*r1*	*di1*	*di2*	*De1*	*De2*	脂润滑	1列受力 单列 DF,DB	2列受力 DT, BFF, FFB BBFF, FFBB	3列受力 FFF, BFFF FFFB	1列受力 单列 DF,DB	2列受力 DT, BFF, FFB BBFF, FFBB	3列受力 FFF, BFFF FFFB	
		mm		min.	min.		mm			rpm							kgf
15TAB04	15	47	15	1	0.6	33.7	26.8	33.5	41	6300	25900	42000	56000	30500	61000	91500	0.14
17TAB04	17	47	15	1	0.6	33.7	26.8	33.5	41	6300	25900	42000	56000	30500	61000	91500	0.13
20TAB04	20	47	15	1	0.6	33.7	26.8	33.5	41	6300	25900	42000	56000	30500	61000	91500	0.12
25TAB06	25	62	15	1	0.6	46.2	39.7	46	53.4	4650	29900	48500	64500	43000	86000	129000	0.24
30TAB06	30	62	15	1	0.6	46.2	39.7	46	53.4	4650	29900	48500	64500	43000	86000	129000	0.21
35TAB07	35	72	15	1	0.6	56.2	49.7	56	63.4	3750	32500	53000	70000	52000	104000	156000	0.29
40TAB07	40	72	15	1	0.6	56.2	49.7	56	63.4	3750	32500	53000	70000	52000	104000	156000	0.26
40TAB09	40	90	20	1	0.6	67.2	57.2	67	78.4	3150	65000	105000	140000	96500	193000	290000	0.62
45TAB07	45	75	20	1	0.6	61.2	55.2	61.5	68.9	3400	33500	54500	72500	56500	113000	170000	0.25
45TAB10	45	100	20	1	0.6	74.2	64.2	74	85.4	2850	68000	111000	147000	108000	216000	324000	0.79
50TAB10	50	100	20	1	0.6	78.2	68.2	78	89.4	2700	69500	113000	150000	114000	228000	342000	0.72
55TAB10	55	100	20	1	0.6	78.2	68.2	78	89.4	2700	69500	113000	150000	114000	228000	324000	0.65
55TAB12	55	120	20	1	0.6	92.2	82.2	92	103.4	2300	73000	119000	158000	131000	262000	393000	1.15
60TAB12	60	120	20	1	0.6	92.2	82.2	92	103.4	2300	73000	119000	158000	131000	262000	393000	1.08

PART E

直线导轨

Linear Guideway

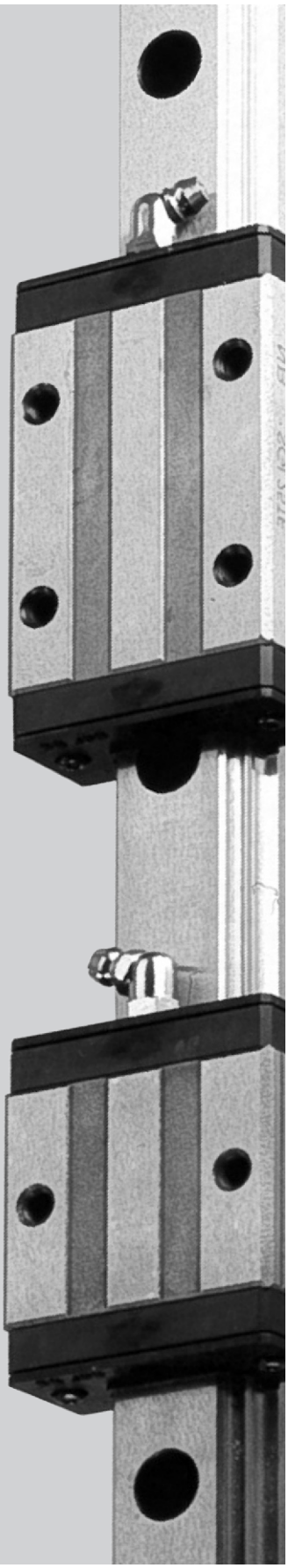

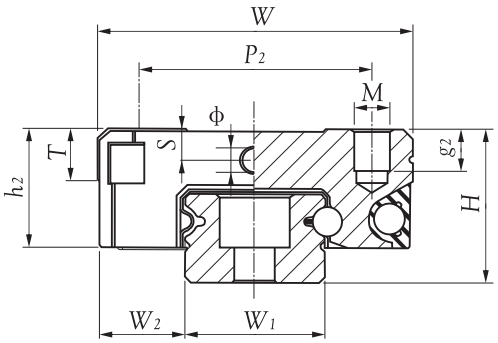

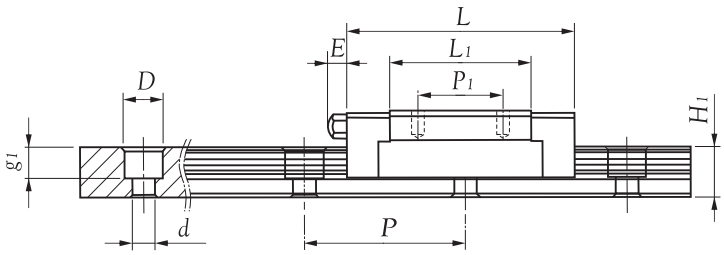

型号 MR. No.	组合尺寸 H	W2	滑座尺寸(mm) W	L	L1	P1	P2	Ø	E	h2	M x g2	S	T	滑轨尺寸(mm) W1	H1	P	D x d x g1	基本荷重(N) 动额定负荷(G)	静额定负荷(G)
MR 15MN	16	8.5	32	43.5	27.0	20.0	25	2.5	3.6	12.0	M3x5.5	2.8	4.3	15	9.5	40	6x3.5x4.5	3810	5590
MR 12MN	13	7.5	27	35.4	22.0	15.0	20	2.0	-	10.0	M3x3.5	2.6	4.3	12	7.5	25	6x3.5x3.5	2308	3465
MR 9MN	10	5.5	20	30.8	20.5	10.0	15	2.0	-	7.8	M3x2.8	2.2	3.3	9	5.5	20	6x3.5x3.5	1570	2495
MR 7MN	8	5.0	17	23.7	14.3	8.0	12	1.2	-	6.5	M2x2.5	1.7	2.8	7	4.7	15	4.2x2.4x2.3	890	1400
MR 5MN	6	3.5	12	16.1	10.0	-	8	0.8	-	4.5	M2x1.5	1.1	2.0	5	3.5	15	3.5x2.4x1	335	550
MR 3MN	4	2.5	8	11.4	6.7	3.5	-	0.3	-	3.3	M1.6x1.1	-	1.5	3	2.6	10	M1.6	190	310

MR-MN 系列直线导轨规格的定义 / Example of identification number of assembled set

MR - 9 - M N - SS - 2 - V0 - P - 120L - 10 - 10 - II

- MR: 产品类别: MR: 微型滚珠线型滑轨; MRU: 下锁式微型滚珠线性滑轨; ST: 有限行程微型滚珠线性滑轨
- 9: 尺寸规格: 以滑轨宽度为尺寸规格，如15,12,9,7,5,3
- M: 滑轨型式: M: 标准型; W: 宽型
- N: 滑座型式: L: 长型; N: 标准型
- SS: 密封配置: SS: 端面密封
- 2: 滑座数目: 每支滑轨所搭配滑座数量
- V0: 预压等级: V0: 无预压; V1: 轻预压 (0.02C)
- P: 精度等级 N :普通级; H : 高级; P : 精密级
- 120L: 滑轨长度
- 10: 起点边长(mm)
- 10: 端点边长(mm)
- II: 套数: 同一轴所装配滑轨数

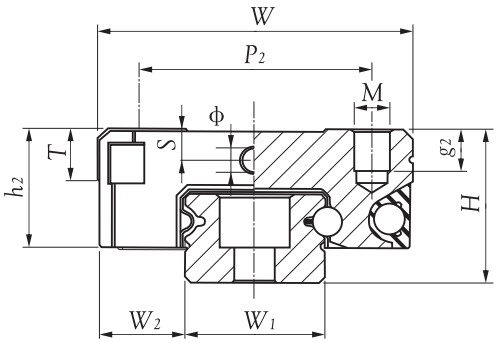

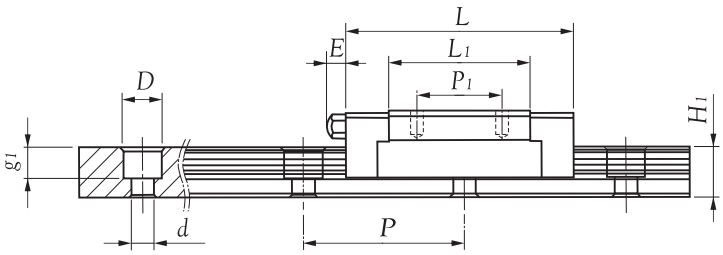

型号	组合尺寸		滑座尺寸(mm)											滑轨尺寸(mm)				基本荷重(N)	
MR. No.	H	W_2	W	L	L_1	P_1	P_2	Ø	E	h_2	M x g_2	S	T	W_1	H_1	P	D x d x g_1	动额定负荷(G)	静额定负荷(G)
MR 15ML	16	8.5	32	60.1	44.0	25.0	25.0	2.5	3.6	12.0	M3x5.5	2.8	4.3	15	9.5	40	6x3.5x4.5	5350	9080
MR 12ML	13	7.5	27	47.6	34.0	20.0	20.0	2.0	-	10.0	M3x3.5	2.6	4.3	12	7.5	25	6x3.5x3.5	3240	5630
MR 9ML	10	5.5	20	40.9	30.8	16.0	15.0	2.0	-	7.8	M3x2.8	2.2	3.3	9	5.5	20	6x3.5x3.5	2135	3880
MR 7ML	8	5.0	17	31.2	21.8	13.0	12.0	1.2	-	6.5	M2x2.5	1.7	2.8	7	4.7	15	4.2x2.4x2.3	1310	2440
MR 5ML	6	3.5	12	19.6	13.5	7.0	-	0.8	-	4.5	M2.6x2	1.1	2.0	5	3.5	15	3.5x2.4x1	470	900
MR 3ML	4	2.5	8	15.7	11.0	5.5	-	0.3	-	3.3	M2x1.1	-	1.5	3	2.6	10	M1.6	295	575

MR-ML 系列直线导轨规格的定义 / Example of identification number of assembled set

MR - 9 - M L - SS - 2 - V0 - P - 120L - 10 - 10 - II

- MR: 产品类别:
  MR: 微型滚珠线型滑轨
  MRU: 下锁式微型滚珠线性滑轨
  ST: 有限行程微型滚珠线性滑轨
- 9: 尺寸规格:
  以滑轨宽度为尺寸规格，如15,12,9,7,5,3
- M: 滑轨型式:
  M: 标准型
  W: 宽型
- L: 滑座型式:
  L: 长型
  N: 标准型
- SS: 密封配置:
  SS: 端面密封
- 2: 滑座数目:
  每支滑轨所搭配滑座数量
- V0: 预压等级:
  V0: 无预压
  V1: 轻预压 (0.02C)
- P: 精度等级
  N :普通级
  H : 高级
  P : 精密级
- 120L: 滑轨长度
- 10: 起点边长(mm)
- 10: 端点边长(mm)
- II: 套数: 同一轴所装配滑轨数

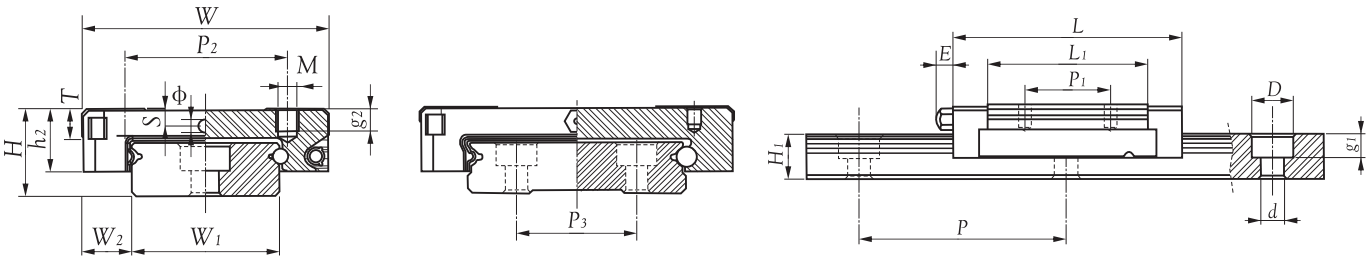

型号 MR. No.	组合尺寸 H	W2	滑座尺寸(mm) W	L	L1	P1	P2	Ø	E	h2	M x g2	S	T	滑轨尺寸(mm) W1	H1	P	P3	D x d x g1	基本荷重(N) 动额定负荷(G)	静额定负荷(G)
MR 15WN	16.0	9.0	60	55.7	38.5	20.0	45	2.5	3.6	12.0	M4x4.5	3.5	4.5	42	9.5	40	23	8x4.5x4.5	5065	8385
MR 12WN	14.0	8.0	40	44.5	31.0	15.0	28	2.0	-	10.0	M3x3.5	3.0	4.5	24	8.5	40	-	8x4.5x4.5	3065	5200
MR 9WN	12.0	6.0	30	39.0	27.4	12.0	21	2.0	-	8.6	M3x3.0	2.0	4.0	18	7.5	30	-	6x3.5x4.5	2030	3605
MR 7WN	9.0	5.5	25	31.6	21.2	10.0	19	1.2	-	7.0	M3x3.0	1.6	3.2	14	5.2	30	-	6x3.5x3.5	1180	2095
MR 5WN	6.5	3.5	17	21.2	15.1	6.5	13	0.8	-	5.0	M2.5x1.5	1.1	2.8	10	4.0	20	-	5.5x3x1.6	475	900
MR 5WNC	6.5	3.5	17	21.2	15.1	6.5	13	0.8	-	5.0	M3/M2.5x1.5	1.2	0.8	10	4.0	20	-	5.5x3x1.6	475	900
MR 3WN	4.5	3.0	12	15.2	10.0	4.5	-	0.3	-	3.5	M2x1.4	0.8	1.8	6	2.6	15	-	4x2.4x1.5	280	530

MR-WN 系列直线导轨规格的定义 / Example of identification number of assembled set

MR - 9 - W N - SS - 2 - V0 - P - 120L - 10 - 10 - II

- MR: 产品类别:
  MR: 微型滚珠线型滑轨
  MRU: 下锁式微型滚珠线性滑轨
  ST: 有限行程微型滚珠线性滑轨
- 9: 尺寸规格:
  以滑轨宽度为尺寸规格，如15,12,9,7,5,3
- W: 滑轨型式:
  M: 标准型
  W: 宽型
- N: 滑座型式:
  L: 长型
  N: 标准型
- SS: 密封配置:
  SS: 端面密封
- 2: 滑座数目:
  每支滑轨所搭配滑座数量
- V0: 预压等级:
  V0: 无预压
  V1: 轻预压 (0.02C)
- P: 精度等级
  N :普通级
  H : 高级
  P : 精密级
- 120L: 滑轨长度
- 10: 起点边长(mm)
- 10: 端点边长(mm)
- II: 套数: 同一轴所装配滑轨数

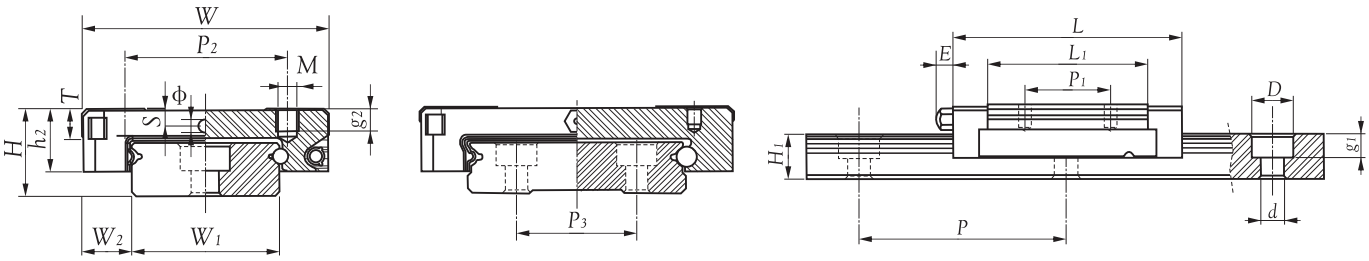

型号	组合尺寸		滑座尺寸(mm)											滑轨尺寸(mm)					基本荷重(N)	
MR. No.	H	W_2	W	L	L_1	P_1	P_2	Ø	E	h_2	M x g_2	S	T	W_1	H_1	P	P_3	D x d x g_1	动额定负荷(G)	静额定负荷(G)
MR 15WL	16.0	9.0	60	74.4	57.6	35.0	45	2.5	3.6	12.0	M4x4.5	3.5	4.5	42	9.5	40	23	8x4.5x4.5	6725	12580
MR 12WL	14.0	8.0	40	59.4	46.0	28.0	28	2.0	-	10.0	M3x3.5	3.0	4.5	24	8.5	40	-	8x4.5x4.5	4070	7800
MR 9WL	12.0	6.0	30	50.7	39.5	24.0	23	2.0	-	8.6	M3x3.0	2.0	4.0	18	7.5	30	-	6x3.5x4.5	2550	4990
MR 7WL	9.0	5.5	25	40.6	30.1	19.0	19	1.2	-	7.0	M3x3.0	1.6	3.2	14	5.2	30	-	6x3.5x3.5	1570	3140
MR 5WL	6.5	3.5	17	27.2	21.2	11.0	13	0.8	-	5.0	M2.5x1.5	1.1	2.3	10	4.0	20	-	5.5x3x1.6	615	1315
MR 5WLC	6.5	3.5	17	27.2	21.2	11.0	13	0.8	-	5.0	M3/M2.5x1.5	1.2	1.8	10	4.0	20	-	5.5x3x1.6	615	1315
MR 3WL	4.5	3.0	12	20.1	15.1	8.0	-	0.3	-	3.5	M2x1.4	0.8	1.8	6	2.6	15	-	4x2.4x1.5	370	800

MR-WL 系列直线导轨规格的定义 / Example of identification number of assembled set

MR - 9 - W L - SS - 2 - V0 - P - 120L - 10 - 10 - II

- MR: 产品类别:
  MR: 微型滚珠线型滑轨
  MRU: 下锁式微型滚珠线性滑轨
  ST: 有限行程微型滚珠线性滑轨
- 9: 尺寸规格:
  以滑轨宽度为尺寸规格，如15,12,9,7,5,3
- W: 滑轨型式:
  M: 标准型
  W: 宽型
- L: 滑座型式:
  L: 长型
  N: 标准型
- SS: 密封配置:
  SS: 端面密封
- 2: 滑座数目:
  每支滑轨所搭配滑座数量
- V0: 预压等级:
  V0: 无预压
  V1: 轻预压 (0.02C)
- P: 精度等级
  N :普通级
  H : 高级
  P : 精密级
- 120L: 滑轨长度
- 10: 起点边长(mm)
- 10: 端点边长(mm)
- II: 套数: 同一轴所装配滑轨数

PART F

微型不锈钢导轨

Mini Guideway

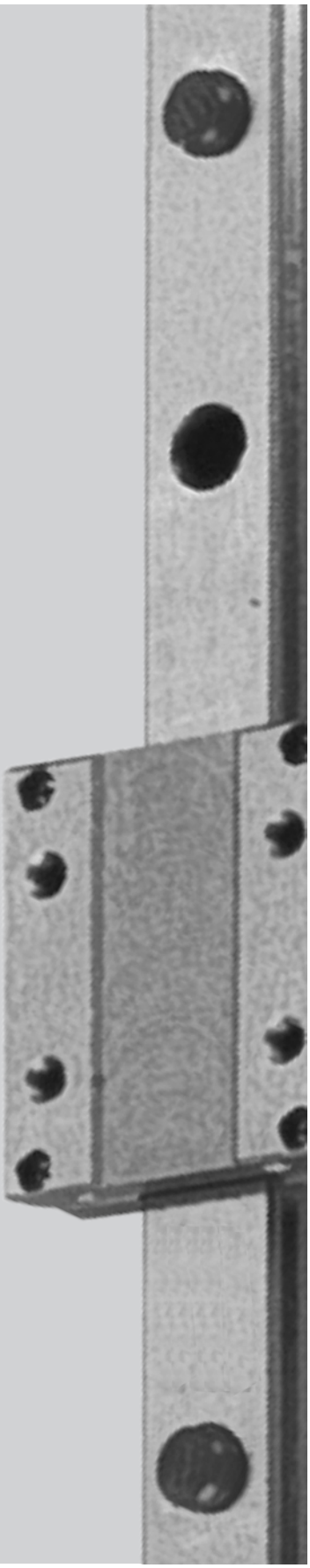

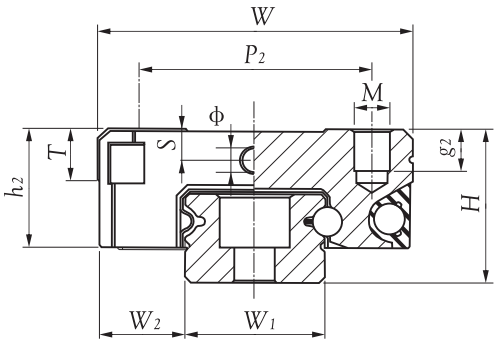

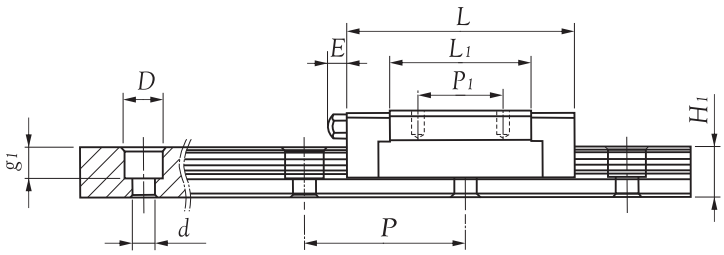

型号 MR. No.	组合尺寸 H	W2	滑座尺寸(mm) W	L	L1	P1	P2	Ø	E	h2	M x g2	S	T	滑轨尺寸(mm) W1	H1	P	D x d x g1	基本荷重(N) 动额定负荷(G)	静额定负荷(G)
MR 15MN	16	8.5	32	43.5	27.0	20.0	25	2.5	3.6	12.0	M3x5.5	2.8	4.3	15	9.5	40	6x3.5x4.5	3810	5590
MR 12MN	13	7.5	27	35.4	22.0	15.0	20	2.0	-	10.0	M3x3.5	2.6	4.3	12	7.5	25	6x3.5x3.5	2308	3465
MR 9MN	10	5.5	20	30.8	20.5	10.0	15	2.0	-	7.8	M3x2.8	2.2	3.3	9	5.5	20	6x3.5x3.5	1570	2495
MR 7MN	8	5.0	17	23.7	14.3	8.0	12	1.2	-	6.5	M2x2.5	1.7	2.8	7	4.7	15	4.2x2.4x2.3	890	1400
MR 5MN	6	3.5	12	16.1	10.0	-	8	0.8	-	4.5	M2x1.5	1.1	2.0	5	3.5	15	3.5x2.4x1	335	550
MR 3MN	4	2.5	8	11.4	6.7	3.5	-	0.3	-	3.3	M1.6x1.1	-	1.5	3	2.6	10	M1.6	190	310

MR-MN 系列直线导轨规格的定义 / Example of identification number of assembled set

MR - 9 - M N - SS - 2 - V0 - P - 120L - 10 - 10 - II

- MR: 产品类别: MR: 微型滚珠线型滑轨; MRU: 下锁式微型滚珠线性滑轨; ST: 有限行程微型滚珠线性滑轨
- 9: 尺寸规格: 以滑轨宽度为尺寸规格，如15,12,9,7,5,3
- M: 滑轨型式: M: 标准型; W: 宽型
- N: 滑座型式: L: 长型; N: 标准型
- SS: 密封配置: SS: 端面密封
- 2: 滑座数目: 每支滑轨所搭配滑座数量
- V0: 预压等级: V0: 无预压; V1: 轻预压 (0.02C)
- P: 精度等级 N :普通级; H : 高级; P : 精密级
- 120L: 滑轨长度
- 10: 起点边长(mm)
- 10: 端点边长(mm)
- II: 套数: 同一轴所装配滑轨数

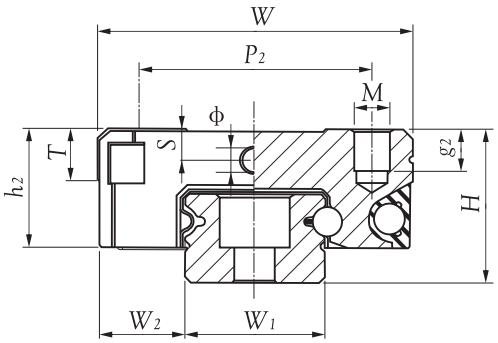

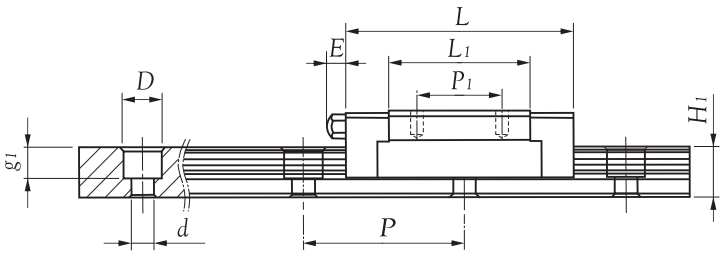

型号	组合尺寸		滑座尺寸(mm)											滑轨尺寸(mm)				基本荷重(N)	
MR. No.	H	W_2	W	L	L_1	P_1	P_2	Ø	E	h_2	M x g_2	S	T	W_1	H_1	P	D x d x g_1	动额定负荷(G)	静额定负荷(G)
MR 15ML	16	8.5	32	60.1	44.0	25.0	25.0	2.5	3.6	12.0	M3x5.5	2.8	4.3	15	9.5	40	6x3.5x4.5	5350	9080
MR 12ML	13	7.5	27	47.6	34.0	20.0	20.0	2.0	-	10.0	M3x3.5	2.6	4.3	12	7.5	25	6x3.5x3.5	3240	5630
MR 9ML	10	5.5	20	40.9	30.8	16.0	15.0	2.0	-	7.8	M3x2.8	2.2	3.3	9	5.5	20	6x3.5x3.5	2135	3880
MR 7ML	8	5.0	17	31.2	21.8	13.0	12.0	1.2	-	6.5	M2x2.5	1.7	2.8	7	4.7	15	4.2x2.4x2.3	1310	2440
MR 5ML	6	3.5	12	19.6	13.5	7.0	-	0.8	-	4.5	M2.6x2	1.1	2.0	5	3.5	15	3.5x2.4x1	470	900
MR 3ML	4	2.5	8	15.7	11.0	5.5	-	0.3	-	3.3	M2x1.1	-	1.5	3	2.6	10	M1.6	295	575

MR-ML 系列直线导轨规格的定义 / Example of identification number of assembled set

MR - 9 - M L - SS - 2 - V0 - P - 120L - 10 - 10 - II

- MR: 产品类别:
  MR: 微型滚珠线型滑轨
  MRU: 下锁式微型滚珠线性滑轨
  ST: 有限行程微型滚珠线性滑轨
- 9: 尺寸规格:
  以滑轨宽度为尺寸规格，如15,12,9,7,5,3
- M: 滑轨型式:
  M: 标准型
  W: 宽型
- L: 滑座型式:
  L: 长型
  N: 标准型
- SS: 密封配置:
  SS: 端面密封
- 2: 滑座数目:
  每支滑轨所搭配滑座数量
- V0: 预压等级:
  V0: 无预压
  V1: 轻预压 (0.02C)
- P: 精度等级
  N :普通级
  H : 高级
  P : 精密级
- 120L: 滑轨长度
- 10: 起点边长(mm)
- 10: 端点边长(mm)
- II: 套数: 同一轴所装配滑轨数

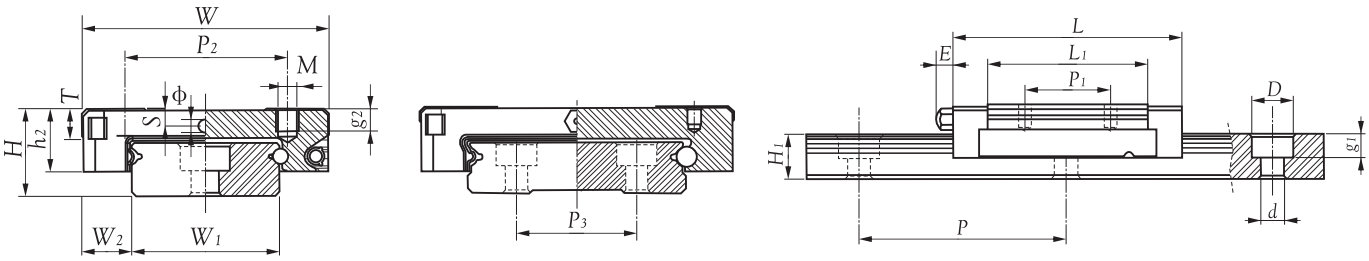

型号 MR. No.	组合尺寸 H	W2	滑座尺寸(mm) W	L	L1	P1	P2	Ø	E	h2	M x g2	S	T	滑轨尺寸(mm) W1	H1	P	P3	D x d x g1	基本荷重(N) 动额定负荷(G)	静额定负荷(G)
MR 15WN	16.0	9.0	60	55.7	38.5	20.0	45	2.5	3.6	12.0	M4x4.5	3.5	4.5	42	9.5	40	23	8x4.5x4.5	5065	8385
MR 12WN	14.0	8.0	40	44.5	31.0	15.0	28	2.0	-	10.0	M3x3.5	3.0	4.5	24	8.5	40	-	8x4.5x4.5	3065	5200
MR 9WN	12.0	6.0	30	39.0	27.4	12.0	21	2.0	-	8.6	M3x3.0	2.0	4.0	18	7.5	30	-	6x3.5x4.5	2030	3605
MR 7WN	9.0	5.5	25	31.6	21.2	10.0	19	1.2	-	7.0	M3x3.0	1.6	3.2	14	5.2	30	-	6x3.5x3.5	1180	2095
MR 5WN	6.5	3.5	17	21.2	15.1	6.5	13	0.8	-	5.0	M2.5x1.5	1.1	2.8	10	4.0	20	-	5.5x3x1.6	475	900
MR 5WNC	6.5	3.5	17	21.2	15.1	6.5	13	0.8	-	5.0	M3/M2.5x1.5	1.2	0.8	10	4.0	20	-	5.5x3x1.6	475	900
MR 3WN	4.5	3.0	12	15.2	10.0	4.5	-	0.3	-	3.5	M2x1.4	0.8	1.8	6	2.6	15	-	4x2.4x1.5	280	530

MR-WN 系列直线导轨规格的定义 / Example of identification number of assembled set

MR - 9 - W N - SS - 2 - V0 - P - 120L - 10 - 10 - II

- MR: 产品类别:
  MR: 微型滚珠线型滑轨
  MRU: 下锁式微型滚珠线性滑轨
  ST: 有限行程微型滚珠线性滑轨
- 9: 尺寸规格:
  以滑轨宽度为尺寸规格，如15,12,9,7,5,3
- W: 滑轨型式:
  M: 标准型
  W: 宽型
- N: 滑座型式:
  L: 长型
  N: 标准型
- SS: 密封配置:
  SS: 端面密封
- 2: 滑座数目:
  每支滑轨所搭配滑座数量
- V0: 预压等级:
  V0: 无预压
  V1: 轻预压 (0.02C)
- P: 精度等级
  N :普通级
  H : 高级
  P : 精密级
- 120L: 滑轨长度
- 10: 起点边长(mm)
- 10: 端点边长(mm)
- II: 套数: 同一轴所装配滑轨数

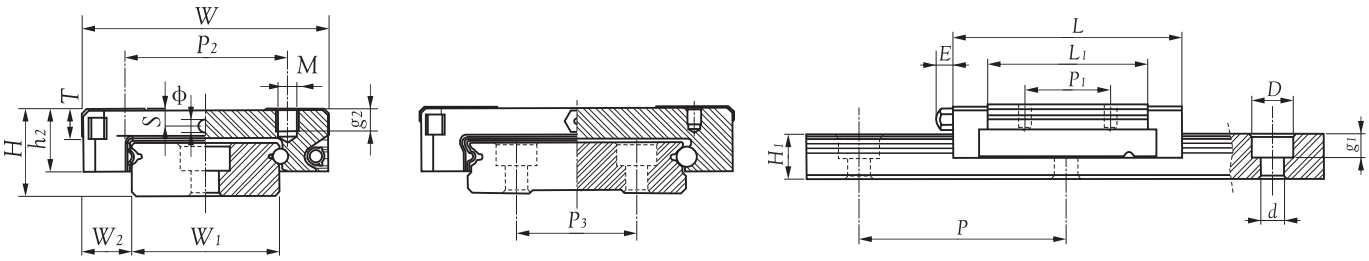

型号	组合尺寸		滑座尺寸(mm)											滑轨尺寸(mm)					基本荷重(N)	
MR. No.	H	W_2	W	L	L_1	P_1	P_2	Ø	E	h_2	M x g_2	S	T	W_1	H_1	P	P_3	D x d x g_1	动额定负荷(G)	静额定负荷(G)
MR 15WL	16.0	9.0	60	74.4	57.6	35.0	45	2.5	3.6	12.0	M4x4.5	3.5	4.5	42	9.5	40	23	8x4.5x4.5	6725	12580
MR 12WL	14.0	8.0	40	59.4	46.0	28.0	28	2.0	-	10.0	M3x3.5	3.0	4.5	24	8.5	40	-	8x4.5x4.5	4070	7800
MR 9WL	12.0	6.0	30	50.7	39.5	24.0	23	2.0	-	8.6	M3x3.0	2.0	4.0	18	7.5	30	-	6x3.5x4.5	2550	4990
MR 7WL	9.0	5.5	25	40.6	30.1	19.0	19	1.2	-	7.0	M3x3.0	1.6	3.2	14	5.2	30	-	6x3.5x3.5	1570	3140
MR 5WL	6.5	3.5	17	27.2	21.2	11.0	13	0.8	-	5.0	M2.5x1.5	1.1	2.3	10	4.0	20	-	5.5x3x1.6	615	1315
MR 5WLC	6.5	3.5	17	27.2	21.2	11.0	13	0.8	-	5.0	M3/M2.5x1.5	1.2	1.8	10	4.0	20	-	5.5x3x1.6	615	1315
MR 3WL	4.5	3.0	12	20.1	15.1	8.0	-	0.3	-	3.5	M2x1.4	0.8	1.8	6	2.6	15	-	4x2.4x1.5	370	800

MR-WL 系列直线导轨规格的定义 / Example of identification number of assembled set

MR - 9 - W L - SS - 2 - V0 - P - 120L - 10 - 10 - II

- MR: 产品类别:
  MR: 微型滚珠线型滑轨
  MRU: 下锁式微型滚珠线性滑轨
  ST: 有限行程微型滚珠线性滑轨
- 9: 尺寸规格:
  以滑轨宽度为尺寸规格，如15,12,9,7,5,3
- W: 滑轨型式:
  M: 标准型
  W: 宽型
- L: 滑座型式:
  L: 长型
  N: 标准型
- SS: 密封配置:
  SS: 端面密封
- 2: 滑座数目:
  每支滑轨所搭配滑座数量
- V0: 预压等级:
  V0: 无预压
  V1: 轻预压 (0.02C)
- P: 精度等级
  N :普通级
  H : 高级
  P : 精密级
- 120L: 滑轨长度
- 10: 起点边长(mm)
- 10: 端点边长(mm)
- II: 套数: 同一轴所装配滑轨数

PART G

交叉滚子导轨

GV Guideway

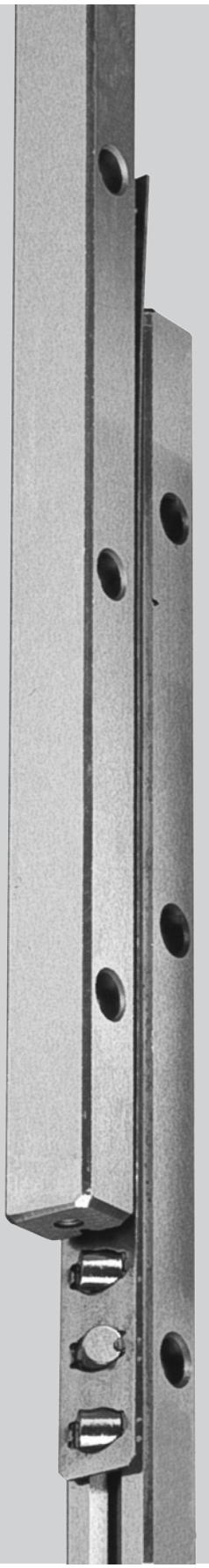

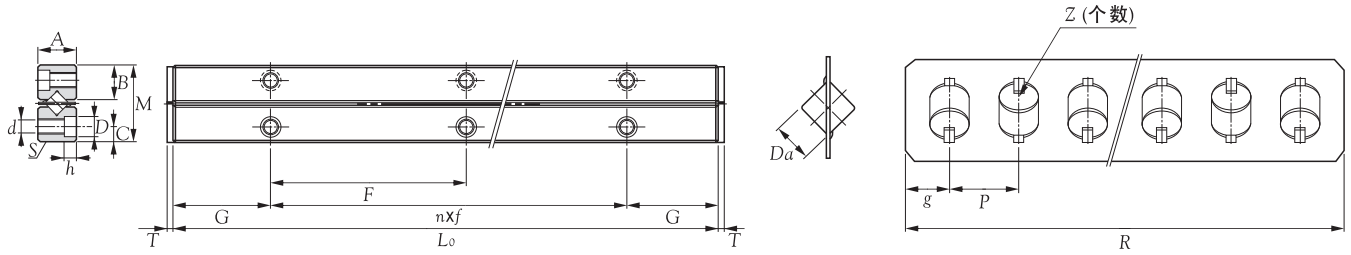

VR. No.	最大行程	组合尺寸(mm) M	A	Lo	安装尺寸(mm) nXf	G	B	C	S	d	D	h	T	Da	滚子数 R	g	P	Z	容许预压量(μm) δ	基本额定负荷(kN) Cz	Coz	质量(轨道) kg/m
VR1-20x5Z	12			20	1x10										14			5				
VR1-30x7Z	22			30	2x10										19			7				
VR1-40x10Z	27			40	3x10										26.5			10				
VR1-50x13Z	32	8.5	4	50	4x10	5	3.9	1.8	M2x0.4	1.65	3	1.4	1.5	1.5	34	2.0	2.5	13	-2	0.098	0.069	0.11
VR1-60x16Z	37			60	5x10										41.5			16				
VR1-70x19Z	42			70	6x10										49			19				
VR1-80x21Z	52			80	7x10										54			21				

注: 1. 要求用与球保持架相组合的球导轨时。

2. 尺寸表中的质量表示的是 1 根导轨每 1 m 的质量。

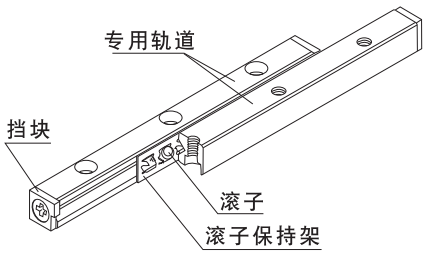

图1: 交叉滚子导轨 VR 型的构造

交叉滚子导轨 VR 型是，将使精密滚子互相直交地组合在一起的滚子保持架与设置在专用轨道上的 90° V 沟槽滚动面组合起来使用。通过将 2 列滚子导轨平行地装配，使之能承受与轴相垂直的所有方向的负荷。而且，因能简单地施加预压，从而能获得间隙且高刚性、动作轻快的滑座机构。

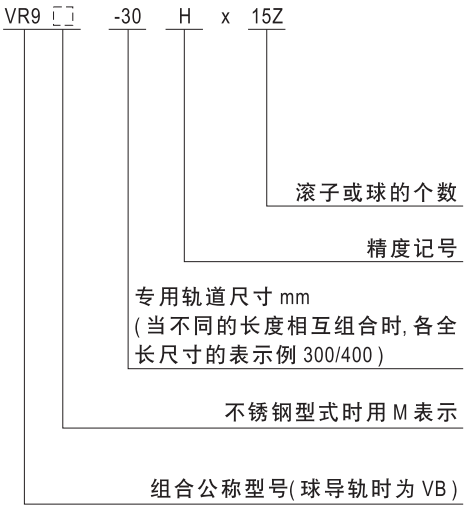

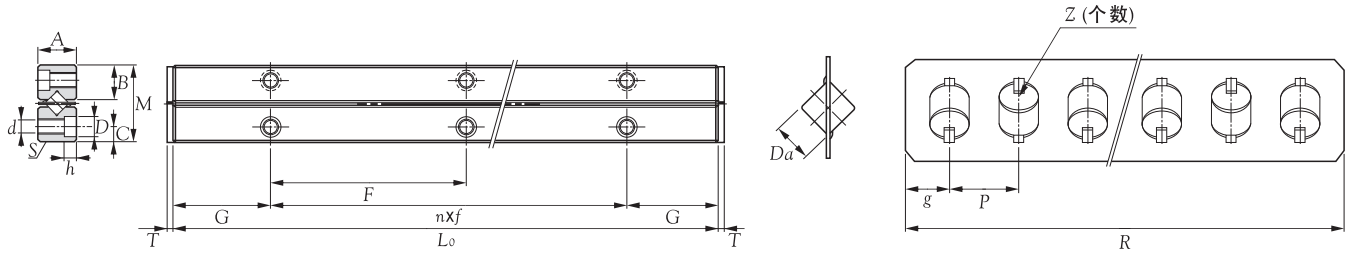

VR. No.	最大行程	组合尺寸(mm) M	A	Lo	安装尺寸(mm) nXf	G	B	C	S	d	D	h	T	Da	滚子数 R	g	P	Z	容许预压量(μm) δ	基本额定负荷(kN) Cz	Coz	质量(轨道) kg/m
VR2-30x5Z	18			30	1x15										21			5				
VR2-45x8Z	24			45	2x15										33			8				
VR2-60x11Z	30			60	3x15										45			11				
VR2-75x13Z	44			75	4x15										53			13				
VR2-90x16Z	50			90	5x15										65			16				
VR2-105x18Z	64	12	6	105	6x15	7.5	5.6	2.5	M3x0.5	2.55	4.4	2	2	2	73	2.5	4	18	-3	0.176	0.127	0.23
VR2-120x21Z	70			120	7x15										85			21				
VR2-135x23Z	84			135	8x15										93			23				
VR2-150x26Z	90			150	9x15										105			26				
VR2-165x29Z	96			165	10x15										117			29				
VR2-180x32Z	102			180	11x15										129			32				
VR3-50x7Z	28			50	1x25										36			7				
VR3-75x10Z	48			75	2x25										51			10				
VR3-100x14Z	58			100	3x25										71			14				
VR3-125x17Z	78			125	4x25										86			17				
VR3-150x21Z	88			150	5x25										103			21				
VR3-175x24Z	108	18	8	175	6x25	12.5	8.3	3.5	M4x0.7	3.3	6	3.1	2.5	3	121	3	5	24	-4	0.363	0.275	0.45
VR3-200x28Z	118			200	7x25										141			28				
VR3-225x31Z	138			225	8x25										156			31				
VR3-250x35Z	148			250	9x25										176			35				
VR3-275x38Z	168			275	10x25										191			38				
VR3-300x42Z	178			300	11x25										211			42				

注: 1. 要求用与球保持架相组合的球导轨时。

2. 尺寸表中的质量表示的是 1 根导轨每 1 m 的质量。

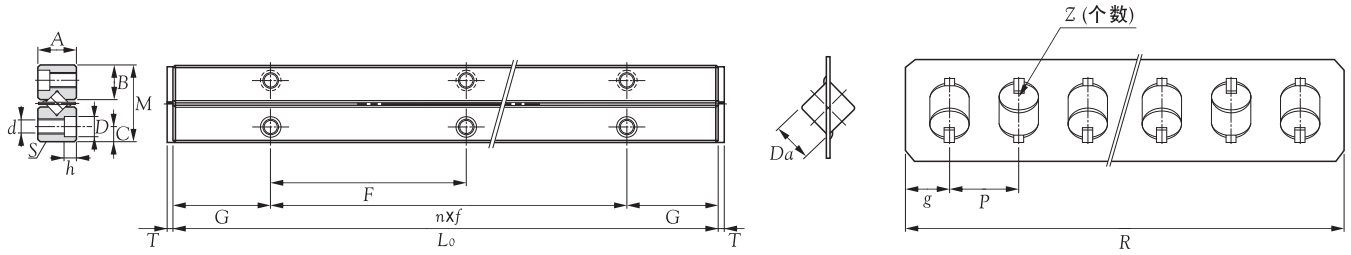

VR. No.	最大行程	组合尺寸(mm) M	A	L_0	安装尺寸(mm) nXf	G	B	C	S	d	D	h	T	Da	R	g	P	滚子数 Z	容许预压量(μm) δ	基本额定负荷(kN) Cz	Coz	质量(轨道) kg/m
VR4-80x7Z	58			80	1x40										51			7				
VR4-120x11Z	82			120	2x40										79			11				
VR4-160x15Z	106			160	3x40										107			15				
VR4-200x19Z	130			200	4x40										135			19				
VR4-240x23Z	154			240	5x40										163			23				
VR4-280x27Z	178	22	11	280	6x40	20	10.2	4.5	M5x0.8	4.3	8	4.2	2.5	4	191	4.5	7	27	-5	0.764	0.637	0.8
VR4-320x31Z	202			320	7x40										219			31				
VR4-360x35Z	226			360	8x40										247			35				
VR4-400x39Z	250			400	9x40										275			39				
VR4-440x43Z	274			440	10x40										303			43				
VR4-480x47Z	298			480	11x40										331			47				
VR6-100x7Z	56			100	1x50										72			7				
VR6-150x10Z	96			150	2x50										102			10				
VR6-200x13Z	136			200	3x50										132			13				
VR6-250x17Z	156			250	4x50										172			17				
VR6-300x20Z	196			300	5x50										202			20				
VR6-350x24Z	216	30	15	350	6x50	25	14.4	6	M6x1.0	5.2	9.5	5.2	3	6	242	6	10	24	-7	1.91	1.76	1.5
VR6-400x27Z	256			400	7x50										272			27				
VR6-450x31Z	276			450	8x50										312			31				
VR6-500x34Z	316			500	9x50										342			34				
VR6-550x38Z	336			550	10x50										382			38				
VR6-600x41Z	376			600	11x50										412			41				

注: 1. 要求用与球保持架相组合的球导轨时。

2. 尺寸表中的质量表示的是 1 根导轨每 1 m 的质量。

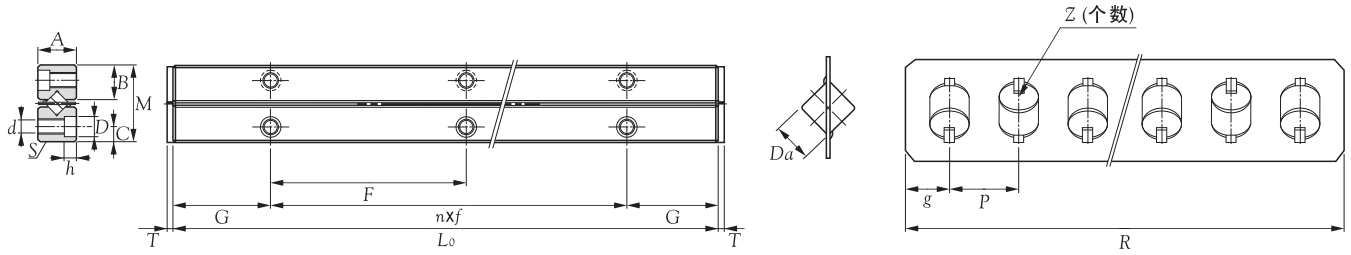

VR. No.	最大行程	组合尺寸(mm) M	A	Lo	安装尺寸(mm) nXf	G	B	C	S	d	D	h	T	Da	R	g	P	滚子数 Z	容许预压量(μm) δ	基本额定负荷(kN) Cz	Coz	质量(轨道) kg/m
VR9-200x10Z	118			200	1x100										141			10				
VR9-300x15Z	178			300	2x100										211			15				
VR9-400x20Z	238			400	3x100										281			20				
VR9-500x25Z	298			500	4x100										351			25				
VR9-600x30Z	358			600	5x100										421			30				
VR9-700x35Z	418	40	20	700	6x100	50	19.2	8	M8x1.25	6.8	10.5	6.2	4	9	491	7.5	14	35	-10	4.31	4.36	3.2
VR9-800x40Z	478			800	7x100										561			40				
VR9-900x45Z	538			900	8x100										631			45				
VR9-1000x50Z	598			1000	9x100										701			50				
VR9-1100x55Z	658			1100	10x100										771			55				
VR9-1200x60Z	718			1200	11x100										841			60				
VR12-200x7Z	110			200	1x100										145			7				
VR12-300x10Z	190			300	2x100										205			10				
VR12-400x14Z	230			400	3x100										285			14				
VR12-500x17Z	310			500	4x100										345			17				
VR12-600x21Z	350			600	5x100										425			21				
VR12-700x24Z	430	58	28	700	6x100	50	28	12	M10x1.5	8.5	14	8.2	5	12	485	12.5	20	24	-13	7.25	7.65	5.3
VR12-800x28Z	470			800	7x100										565			28				
VR12-900x31Z	550			900	8x100										625			31				
VR12-1000x34Z	630			1000	9x100										685			34				
VR12-1100x38Z	670			1100	10x100										765			38				
VR12-1200x41Z	750			1200	11x100										825			41				

注: 1. 表中括号内的尺寸表示着球导轨的尺寸。要求用与球保持架相组合的球导轨时。

2. 尺寸表中的质量表示的是 1 根导轨每 1 m 的质量。

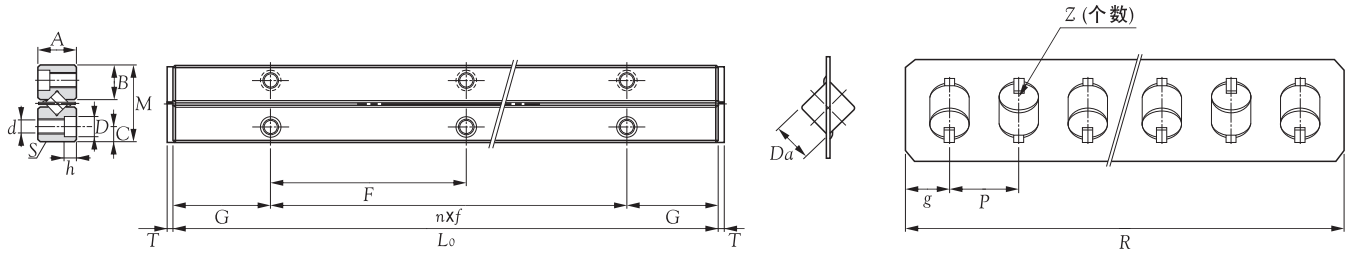

VR. No.	最大行程	组合尺寸(mm) M	A	Lo	安装尺寸(mm) nxf	G	B	C	S	d	D	h	T	Da	R	g	P	滚子数 Z	容许预压量(μm) δ	基本额定负荷(kN) Cz	Coz	质量(轨道) kg/m
VR15-300x8Z	190			300	2x100										205			8				
VR15-400x11Z	240			400	3x100										280			11				
VR15-500x13Z	340			500	4x100										330			13				
VR15-600x16Z	390			600	5x100										405			16				
VR15-700x19Z	440	71	36	700	6x100	50	34.4	14	M12x1.75	10.5	17.5	10.2	6	15	480	15	25	19	-16	11.3	12.4	8.3
VR15-800x22Z	490			800	7x100										555			22				
VR15-900x25Z	540			900	8x100										630			25				
VR15-1000x27Z	640			1000	9x100										680			27				
VR15-1100x30Z	690			1100	10x100										755			30				
VR15-1200x33Z	740			1200	11x100										830			33				
VR18-300x6Z	228			300	2x100										186			6				
VR18-400x9Z	248			400	3x100										276			9				
VR18-500x11Z	328			500	4x100										336			11				
VR18-600x13Z	408			600	5x100										396			13				
VR18-700x16Z	428	83	40	700	6x100	50	40.2	18	M14x2.0	12.5	20	12.2	6	18	486	18	30	16	-18	15.9	17.8	10.5
VR18-800x18Z	508			800	7x100										546			18				
VR18-900x20Z	588			900	8x100										606			20				
VR18-1000x23Z	608			1000	9x100										696			23				
VR18-1100x25Z	688			1100	10x100										756			25				
VR18-1200x27Z	768			1200	11x100										816			27				

注: 尺寸表中的质量表示的是 1 根导轨每 1 m 的质量。

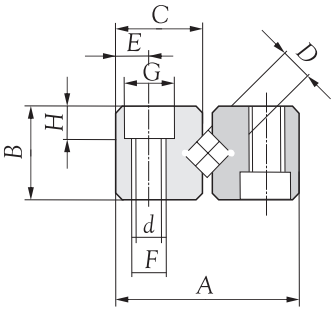

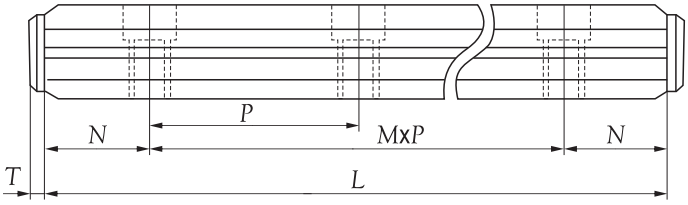

GV. No.	标准	组合尺寸(mm)			安装尺寸(mm)										基本额定负荷 (kN)	
	行程	A	B	L	D	C	M x P	N	E	F	d	G	H	T	Cz	Coz
GV3 075	48	18	8	75	3	8.3	2 x 25	12.5	3.5	M4	3.3	6.0	3.1	2	0.36	0.27
GV3 100	58	18	8	100	3	8.3	3 x 25	12.5	3.5	M4	3.3	6.0	3.1	2	0.36	0.27
GV3 125	78	18	8	125	3	8.3	4 x 25	12.5	3.5	M4	3.3	6.0	3.1	2	0.36	0.27
GV3 150	88	18	8	150	3	8.3	5 x 25	12.5	3.5	M4	3.3	6.0	3.1	2	0.36	0.27
GV3 175	105	18	8	175	3	8.3	6 x 25	12.5	3.5	M4	3.3	6.0	3.1	2	0.36	0.27
GV3 200	115	18	8	200	3	8.3	7 x 25	12.5	3.5	M4	3.3	6.0	3.1	2	0.36	0.27
GV4 080	58	22	11	80	4	10.2	1 x 40	20.0	4.5	M5	4.3	8.0	4.2	2	0.76	0.63
GV4 120	82	22	11	120	4	10.2	2 x 40	20.0	4.5	M5	4.3	8.0	4.2	2	0.76	0.63
GV4 160	105	22	11	160	4	10.2	3 x 40	20.0	4.5	M5	4.3	8.0	4.2	2	0.76	0.63
GV4 200	130	22	11	200	4	10.2	4 x 40	20.0	4.5	M5	4.3	8.0	4.2	2	0.76	0.63
GV4 240	150	22	11	240	4	10.2	5 x 40	20.0	4.5	M5	4.3	8.0	4.2	2	0.76	0.63
GV4 280	175	22	11	280	4	10.2	6 x 40	20.0	4.5	M5	4.3	8.0	4.2	2	0.76	0.63
GV6 150	85	31	15	150	6	14.2	2 x 50	25.0	6.0	M6	5.2	9.5	5.2	3	1.90	1.70
GV6 200	120	31	15	200	6	14.2	3 x 50	25.0	6.0	M6	5.2	9.5	5.2	3	1.90	1.70
GV6 250	150	31	15	250	6	14.2	4 x 50	25.0	6.0	M6	5.2	9.5	5.2	3	1.90	1.70
GV6 300	185	31	15	300	6	14.2	5 x 50	25.0	6.0	M6	5.2	9.5	5.2	3	1.90	1.70
GV6 350	215	31	15	350	6	14.2	6 x 50	25.0	6.0	M6	5.2	9.5	5.2	3	1.90	1.70
GV6 400	245	31	15	400	6	14.2	7 x 50	25.0	6.0	M6	5.2	9.5	5.2	3	1.90	1.70
GV9 200	115	44	22	200	9	20.2	1 x 100	50.0	9.0	M8	6.8	10.5	6.2	4	4.30	4.35
GV9 300	175	44	22	300	9	20.2	2 x 100	50.0	9.0	M8	6.8	10.5	6.2	4	4.30	4.35
GV9 400	235	44	22	400	9	20.2	3 x 100	50.0	9.0	M8	6.8	10.5	6.2	4	4.30	4.35
GV9 500	295	44	22	500	9	20.2	4 x 100	50.0	9.0	M8	6.8	10.5	6.2	4	4.30	4.35
GV9 600	355	44	22	600	9	20.2	5 x 100	50.0	9.0	M8	6.8	10.5	6.2	4	4.30	4.35
GV9 700	415	44	22	700	9	20.2	6 x 100	50.0	9.0	M8	6.8	10.5	6.2	4	4.30	4.35

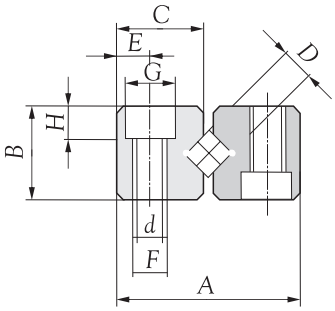

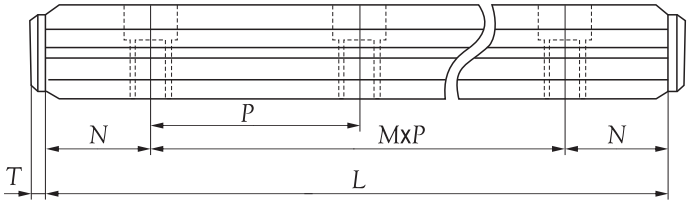

GV. No.	标准	组合尺寸(mm)			安装尺寸(mm)										基本额定负荷 (kN)	
	行程	A	B	L	D	C	M x P	N	E	F	d	G	H	T	Cz	Coz
GV12 300	200	58	28	300	12	27.0	2 x 100	50	12	M10	8.5	13.5	8.2	4	7.2	7.6
GV12 400	240	58	28	400	12	27.0	3 x 100	50	12	M10	8.5	13.5	8.2	4	7.2	7.6
GV12 500	320	58	28	500	12	27.0	4 x 100	50	12	M10	8.5	13.5	8.2	4	7.2	7.6
GV12 600	360	58	28	600	12	27.0	5 x 100	50	12	M10	8.5	13.5	8.2	4	7.2	7.6
GV12 700	440	58	28	700	12	27.0	6 x 100	50	12	M10	8.5	13.5	8.2	4	7.2	7.6
GV12 800	480	58	28	800	12	27.0	7 x 100	50	12	M10	8.5	13.5	8.2	4	7.2	7.6
GV15 400	260	71	36	400	15	33.0	3 x 100	50	14	M12	10.5	16.5	10.2	5	11.2	12.3
GV15 500	325	71	36	500	15	33.0	4 x 100	50	14	M12	10.5	16.5	10.2	5	11.2	12.3
GV15 600	395	71	36	600	15	33.0	5 x 100	50	14	M12	10.5	16.5	10.2	5	11.2	12.3
GV15 700	420	71	36	700	15	33.0	6 x 100	50	14	M12	10.5	16.5	10.2	5	11.2	12.3
GV15 800	485	71	36	800	15	33.0	7 x 100	50	14	M12	10.5	16.5	10.2	5	11.2	12.3
GV15 900	555	71	36	900	15	33.0	8 x 100	50	14	M12	10.5	16.5	10.2	5	11.2	12.3
GV18 500	335	83	40	500	18	38.5	4 x 100	50	18	M14	12.5	18.5	12.2	6	16.3	17.5
GV18 600	415	83	40	600	18	38.5	5 x 100	50	18	M14	12.5	18.5	12.2	6	16.3	17.5
GV18 700	435	83	40	700	18	38.5	6 x 100	50	18	M14	12.5	18.5	12.2	6	16.3	17.5
GV18 800	515	83	40	800	18	38.5	7 x 100	50	18	M14	12.5	18.5	12.2	6	16.3	17.5
GV18 900	595	83	40	900	18	38.5	8 x 100	50	18	M14	12.5	18.5	12.2	6	16.3	17.5
GV18 1000	615	83	40	1000	18	38.5	9 x 100	50	18	M14	12.5	18.5	12.2	6	16.3	17.5

PART H

高速导轨

TL Guideway

TLB 12: 标准可调型,一个滑块含四个滚轮轴承

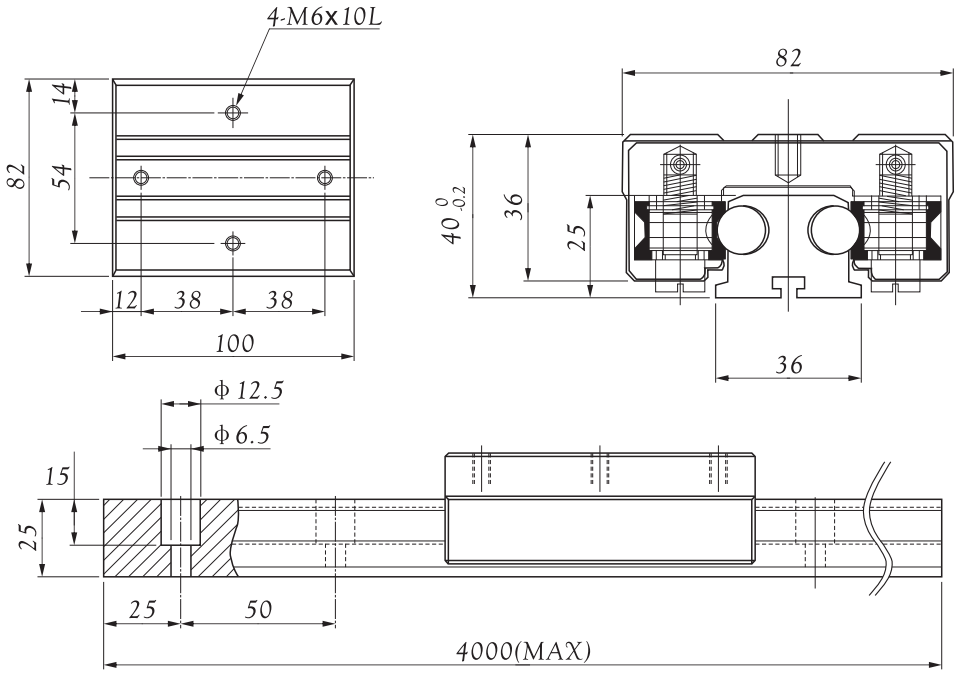

技术说明:

1.轴心轴径:Φ12mm

2.基本动负荷:180 kgf

3.基本静负荷:290 kgf

4.容许静力矩:

4.0-5.4 kgf · m

5.TLB 12可调间隙:0.5mm

6.订购示例:

TLB 12-2-1800 L

TLB12N: 标准不可调型,一个滑块含四个滚轮轴承

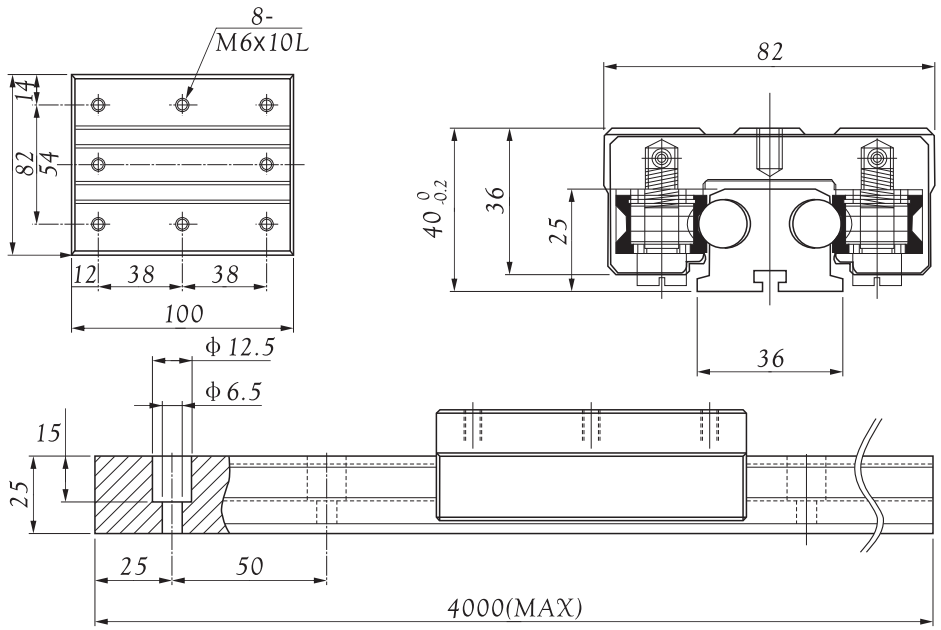

技术说明:

1.轴心轴径:Φ12mm

2.基本动负荷:180 kgf

3.基本静负荷:290 kgf

4.容许静力矩:

4.0-5.4 kgf · m

5.TLB 12可调间隙:0.5mm

6.订购示例:

TLB 12N-2-1800 L

TLB 12L: 标准加长型,一个滑块含四个滚轮轴承

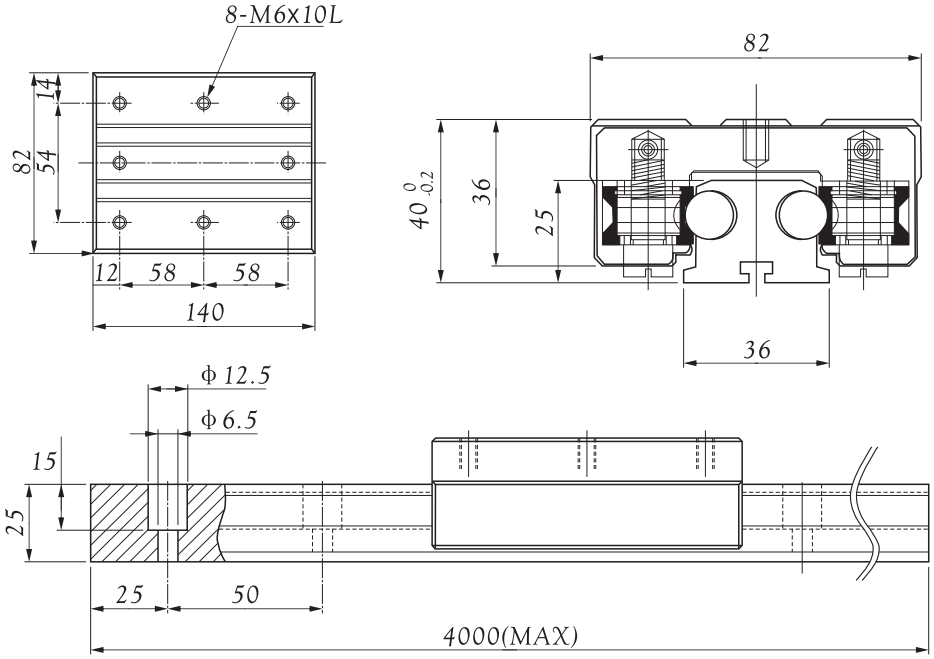

技术说明:

1.轴心轴径:φ12mm

2.基本动负荷:180 kgf

3.基本静负荷:290 kgf

4.容许静力矩:

5.4-8.5kgf · m

5.订购示例:

TLB 12L-2-1800 L

TLB 12S: 短型,一个滑块含两个滚轮轴承

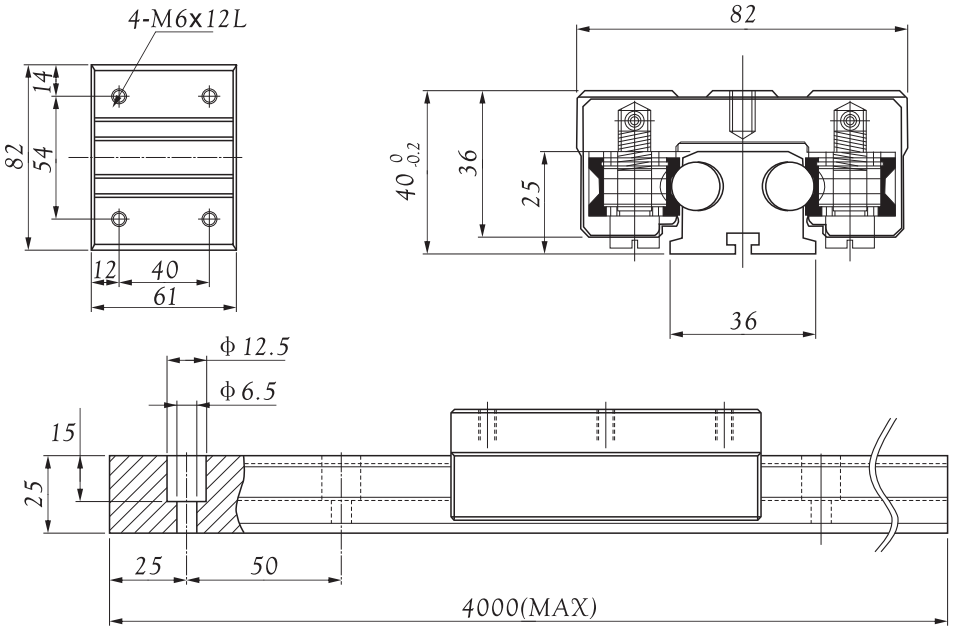

技术说明:

1.轴心轴径:φ12mm

2.基本动负荷:180 kgf

3.基本静负荷:290 kgf

4.容许静力矩:

5.4-8.5kgf · m

5.订购示例:

TLB 12S-2-1800 L

TLB 12XL: 标准超长型,一个滑块含八个滚轮轴承

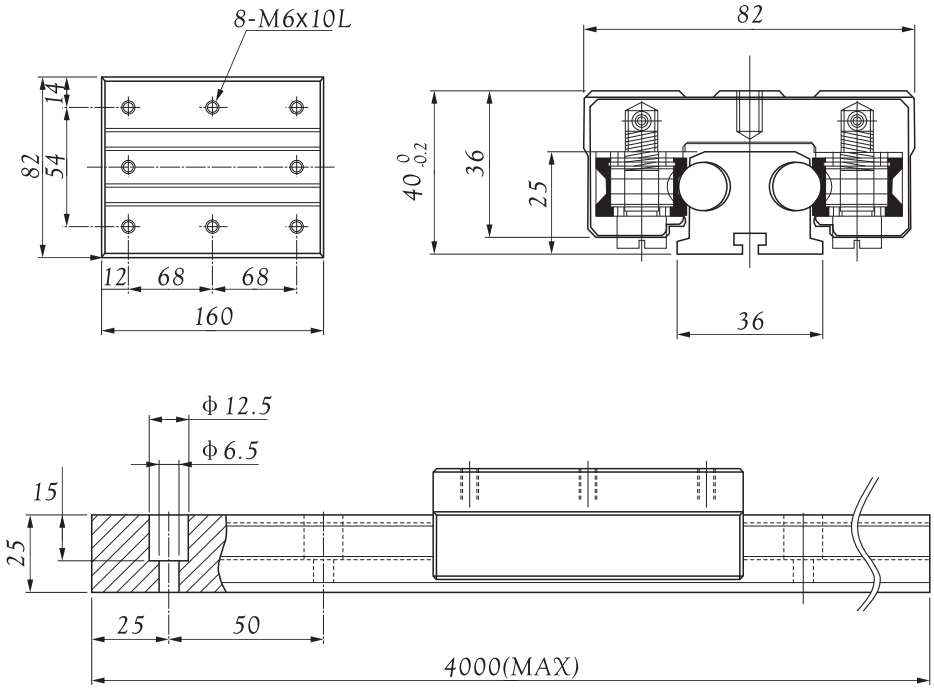

技术说明:

1.轴心轴径: ϕ 12mm

2.基本动负荷:290 kgf

3.基本静负荷:460 kgf

4.容许静力矩:

8.7-13.6 kgf · m

5.订购示例:

TLB 12XL-2-1800 L

TLE 12: 简易型,一个滑块含四个滚轮轴承

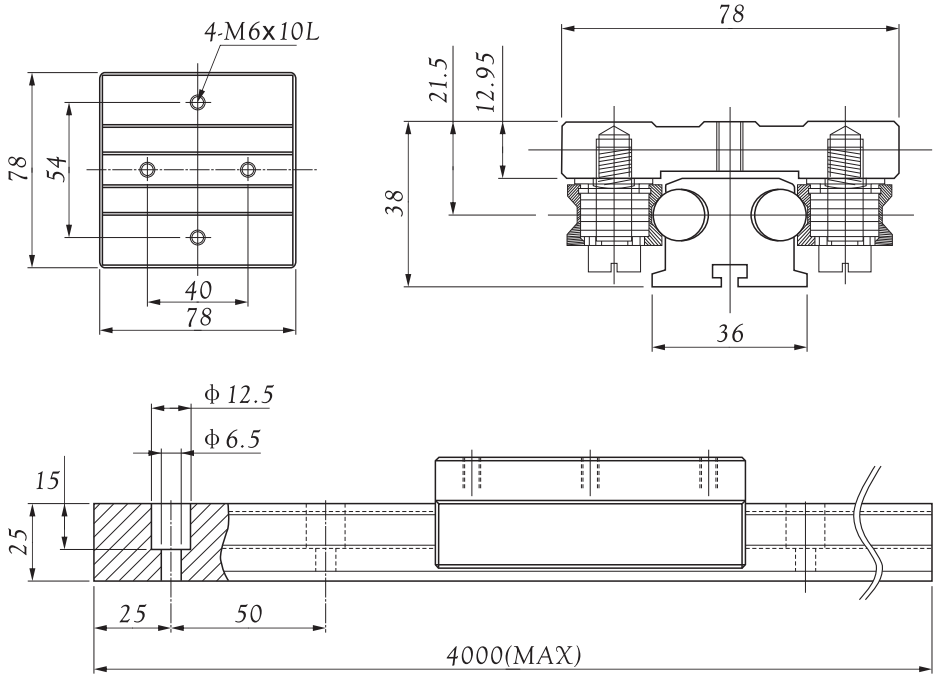

技术说明:

1.轴心轴径:Φ12mm

2.基本动负荷:140 kgf

3.基本静负荷:230 kgf

4.容许静力矩:

3.2-4.3 kgf · m

5.订购示例:

TLE 12-2-1800 L

PART I

滚轮轴承

Track Roller Bearing

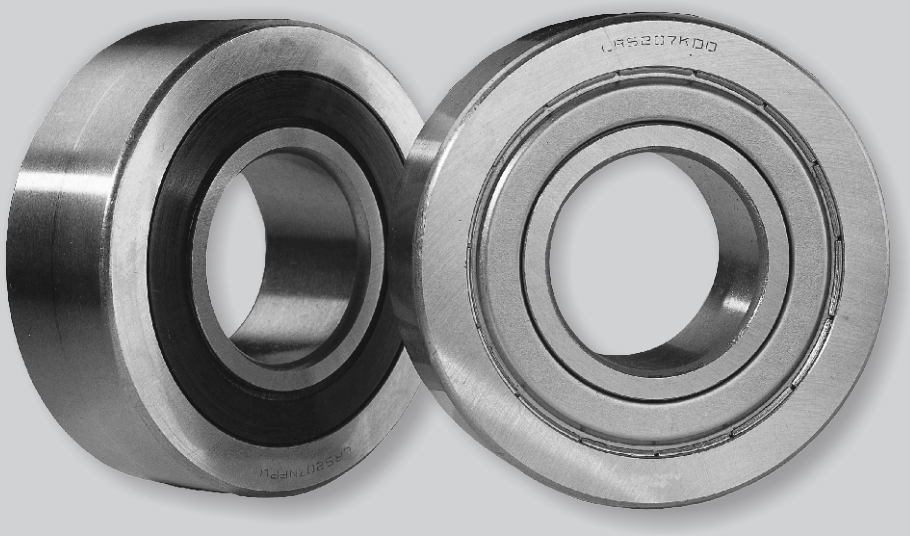

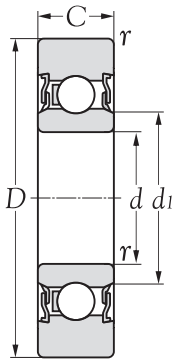

NPP

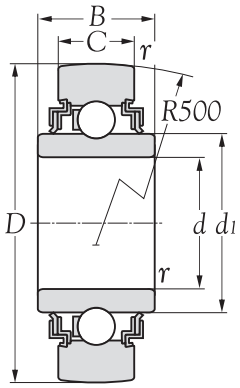

RRU

内径尺寸 d mm	型号	基本尺寸 D	C	rs mm	d1	B	基本额定负荷 动负荷 C N	静负荷 Co N	极限转速 grease rpm	oil rpm	重量 kg. (approx.)
10	**LR 200 NPP**	32	9	0.6	15.4	-	4,200	2,050	13,000	-	0.050
12	**LR 201 NPP**	35	10	0.6	17.1	-	5,500	2,600	15,000	-	0.050
15	**LR 202 NPP**	40	11	0.6	20.0	-	6,700	3,150	14,000	-	0.070
17	**LR 203 NPP**	47	12	0.6	22.5	-	9,100	4,200	11,000	-	0.110
20	**LR 204 NPP**	52	14	1.0	26.5	-	11,800	5,400	10,000	-	0.150
25	**LR 205 NPP**	62	15	1.0	30.3	-	14,900	6,800	9,000	-	0.230
30	**LR 206 NPP**	72	16	1.0	37.4	-	20,800	9,200	5,500	-	0.330
35	**LR 207 NPP**	80	17	1.1	42.4	-	26,100	11,400	4,500	-	0.400
45	**LR 209 NPP**	90	19	1.1	53.2	-	30,300	13,100	3,600	-	0.450
12	**LR 201 RRU**	35	10	0.6	18.5	15.0	5,500	3,000	15,000	-	0.070
15	**LR 202 RRU**	40	11	0.6	21.5	14.4	6,700	3,500	14,000	-	0.080

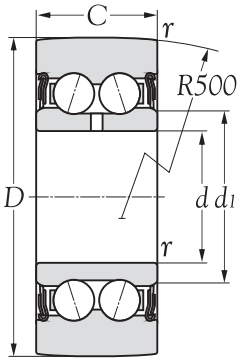

Type LR 50..NPPU
(Light-contact, double seals)

内径尺寸 d mm	型号	基本尺寸 D	C	rs	d1	基本额定负荷 动负荷 C	静负荷 Co	极限转速 grease	oil	重量 kg. (approx.)
		mm				N		rpm		
5	LR 50/5 NPP	17	7	0.2	8.2	1,960	940	12,000	-	0.01
6	LR 50/6 NPP	19	9	0.3	9.3	2,700	1,370	11,000	-	0.02
7	LR 50/7 NPP	22	10	0.3	10.5	3,300	1,700	10,000	-	0.02
8	LR 50/8 NPP	24	11	0.3	10.5	4,300	2,390	10,000	-	0.03
10	LR 5000 NPPU	28	12	0.3	13.5	4,750	2,850	9,000	-	0.03
12	LR 5001 NPPU	30	12	0.3	15.5	5,100	3,100	8,500	-	0.03
15	LR 5002 NPPU	35	13	0.3	20.4	6,500	4,150	7,000	-	0.05
17	LR 5003 NPPU	40	14	0.3	21.6	7,800	5,300	6,000	-	0.07
20	LR 5004 NPPU	47	16	0.6	25.2	11,700	7,700	5,500	-	0.12
25	LR 5005 NPPU	52	16	0.6	29.8	11,800	8,200	4,700	-	0.15
30	LR 5006 NPPU	62	19	1.0	35.5	16,100	11,900	4,000	-	0.25
35	LR 5007 NPPU	68	20	1.0	41.7	17,800	13,300	4,300	-	0.30

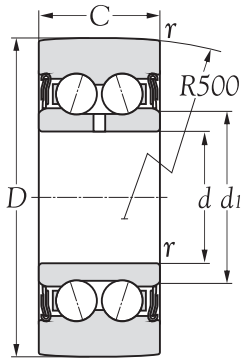

NPPU

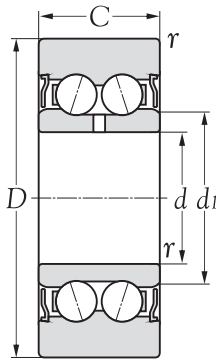

KDD

内径尺寸 d mm	型号	基本尺寸 D	C	rs	d1	基本额定负荷 动负荷 C	静负荷 Co	极限转速 grease	oil	重量 kg. (approx.)
		mm				N		rpm		
10	LR 5200 NPPU	32	14.0	0.6	15.4	6,500	3,900	8,000	-	0.070
12	LR 5201 NPPU	35	15.9	0.6	17.1	8,500	4,900	7,500	-	0.080
15	LR 5202 NPPU	40	15.9	0.6	20.0	10,100	5,900	7,000	-	0.110
17	LR 5203 NPPU	47	17.5	0.6	22.5	13,700	7,800	5,500	-	0.170
20	LR 5204 NPPU	52	20.6	1.0	26.5	17,700	10,000	5,000	-	0.230
25	LR 5205 NPPU	62	20.6	1.0	30.3	22,000	12,400	4,500	-	0.340
30	LR 5206 NPPU	72	23.8	1.0	37.4	30,700	20,400	3,500	-	0.510
35	LR 5207 NPPU	80	27.0	1.1	42.4	39,400	21,300	2,800	-	0.660
40	LR 5208 NPPU	85	30.2	1.1	48.4	45,500	24,300	2,500	-	0.750
10	LR 5200 KDD	32	14.0	0.6	15.4	6,500	3,900	11,000	-	0.070
12	LR 5201 KDD	35	15.9	0.6	17.1	8,500	4,900	10,000	-	0.080
15	LR 5202 KDD	40	15.9	0.6	20.0	10,100	5,900	10,000	-	0.110
17	LR 5203 KDD	47	17.5	0.6	22.5	13,700	7,800	7,500	-	0.170
20	LR 5204 KDD	52	20.6	1.0	26.5	17,700	10,000	7,000	-	0.230
25	LR 5205 KDD	62	20.6	1.0	30.3	22,000	12,400	6,500	-	0.340
30	LR 5206 KDD	72	23.8	1.0	37.4	30,700	20,400	5,000	-	0.510
35	LR 5207 KDD	80	27.0	1.1	42.4	39,400	21,300	3,900	-	0.660
40	LR 5208 KDD	85	30.2	1.1	48.4	45,500	24,300	3,500	-	0.750

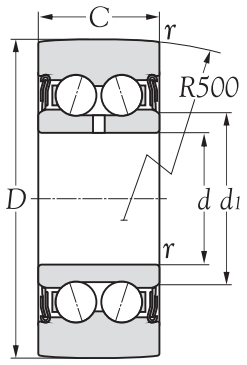

NPPU

内径尺寸 d mm	型号	基本尺寸 D	C	rs	d1	基本额定负荷 动负荷 C	静负荷 Co	极限转速 grease	oil	重量 kg. (approx.)
		mm				N		rpm		
17	LR 5303 NPPU	52	22.2	1.0	23.5	19,300	10,600	4,700	-	0.210
20	LR 5304 NPPU	62	22.2	1.1	29.0	25,100	13,800	4,500	-	0.340
25	LR 5305 NPPU	72	25.4	1.1	34.4	34,300	18,600	3,900	-	0.500
30	LR 5306 NPPU	80	30.2	1.1	41.4	47,200	25,200	3,100	-	0.670
35	LR 5307 NPPU	90	34.9	1.5	47.7	59,800	31,400	2,500	-	0.970
40	LR 5308 NPPU	100	36.5	1.5	52.4	78,000	39,900	2,300	-	1.200

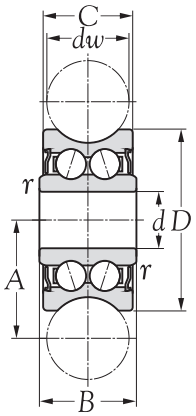

ZZ

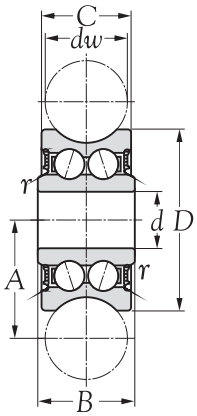

2RS

内径尺寸 d mm	型号		基本尺寸 dw	D	C	B	A	rs	基本额定负荷 动负荷 C	静负荷 Co	极限转速 grease	oil	重量 kg. (approx.)
					mm				N		rpm		
4	LFR 50/4-4 ZZ	LFR 50/4-4 2RS	4	13.0	6.0	7.0	7.55	0.2	1050	850	1150	1600	0.007
5	LFR 50/5-4 ZZ	LFR 50/5-4 2RS	4	16.0	7.0	8.0	9.00	0.2	1200	860	1300	1780	0.009
5	LFR 50/5-6 ZZ	LFR 50/5-6 2RS	6	17.0	7.0	8.0	10.50	0.2	1270	820	1300	1780	0.010
8	LFR 50/8-6 ZZ	LFR 50/8-6 2RS	6	24.0	11.0	11.0	14.00	0.3	3670	2280	1300	4560	0.020
12	LFR 5201-10 ZZ	LFR 5201-10 2RS	10	35.0	15.9	15.9	20.65	0.3	8500	5100	5100	10200	0.080
12	LFR 5301-10 ZZ	LFR 5301-10 2RS	10	42.0	19.0	19.0	24.00	0.6	13000	7700	7500	14200	0.100
15	LFR 5302-10 ZZ	LFR 5302-10 2RS	10	47.0	19.0	19.0	26.65	1.0	16200	9200	6200	18400	0.170
12	LFR 5201-12 ZZ	LFR 5201-12 2RS	12	35.0	15.9	15.9	21.75	0.3	8400	5000	5100	10000	0.085
12	LFR 5201-14 ZZ	LFR 5201-14 2RS	14	39.9	18.0	20.0	24.00	0.3	8900	5000	6700	12100	0.095
20	LFR 5204-16 ZZ*	LFR 5204-16 2RS*	16	52.0	20.6	22.6	31.50	0.6	16800	9500	12100	16600	0.230
25	LFR 5206-20 ZZ*	LFR 5206-20 2RS*	20	72.0	23.8	25.8	41.00	0.6	29500	16600	20700	33200	0.250
25	LFR 5206-25 ZZ*	LFR 5206-25 2RS*	25	72.0	23.8	25.8	43.50	0.6	29200	16400	23100	32800	0.250
30	LFR 5207-30 ZZ*	LFR 5207-30 2RS*	30	80.0	27.0	29.0	51.00	1.0	38000	20800	21400	36200	0.660
40	LFR 5208-40 ZZ*	LFR 5208-40 2RS*	40	98.0	36.0	38.0	62.50	1.0	54800	29000	55000	58000	1.360
40	LFR 5308-50 ZZ*	LFR 5308-50 2RS*	50	110.0	44.0	46.0	72.50	1.1	53000	39500	69000	79000	1.400

备注：* 在内圈上带有标准润滑孔。

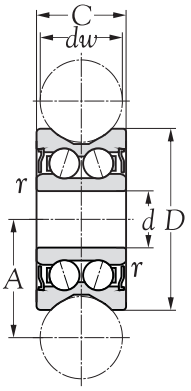

内径尺寸	型号	基本尺寸					基本额定负荷		极限转速		重量
							动负荷	静负荷			kg.
d		dw	D	C	A	rs	C	Co	grease	oil	(approx.)
mm		mm					N		rpm		
7	RV 20/7-10	10	22	11	14.50	0.3	2,450	1,620	2,350	4,150	0.017
8	RV 20/8-10	10	30	14	18.10	0.3	4,490	2,700	11,000	19,800	0.062
15	RV 202/15.38-10	10	38	17	22.25	0.5	7,290	4,550	10,200	17,900	0.086
15	RV 20/15.40-10	10	40	18	22.00	0.5	7,950	4,950	14,500	26,500	0.110
12	RV 201/12-20	20	41	20	28.00	0.3	8,180	5,100	17,200	31,500	0.130
15	RV 202/15.41-20	20	41	20	28.00	0.5	8,180	5,100	17,200	31,500	0.120
17	RV 203/17-20	20	58	25	35.00	0.5	16,580	9,200	47,000	86,000	0.325
20	RV 204/20.57-30	30	57	22	41.00	0.6	16,910	9,200	47,000	86,000	0.290
20	RV 204/20.58-30	30	58	25	41.00	0.6	16,790	9,200	40,000	72,000	0.310

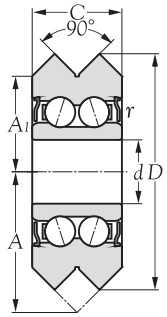

2Z

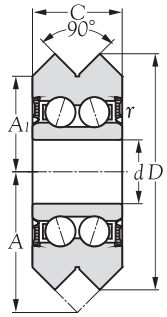

2RS

内径尺寸 d mm	型号		基本尺寸 D	A	C	A1	rs	基本额定负荷 动负荷 C	静负荷 Co	极限转速 grease	oil	重量 kg. (approx.)
			mm					N		rpm		
4.763	RM 1 2Z	RM 1 2RS	19.56	11.86	7.87	7.93	0.3	1,650	1,140	4,150	7,500	0.012
9.525	RM 2 2Z	RM 2 2RS	30.73	18.24	11.10	12.70	0.3	8,260	2,650	6,500	11,700	0.040
11.999	RM 3 2Z	RM 3 2RS	45.72	26.98	15.88	19.05	0.6	5,530	5,200	31,000	55,000	0.136
15.001	RM 4 2Z	RM 4 2RS	59.94	34.93	19.05	25.40	1.0	16,250	9,200	39,500	72,000	0.285

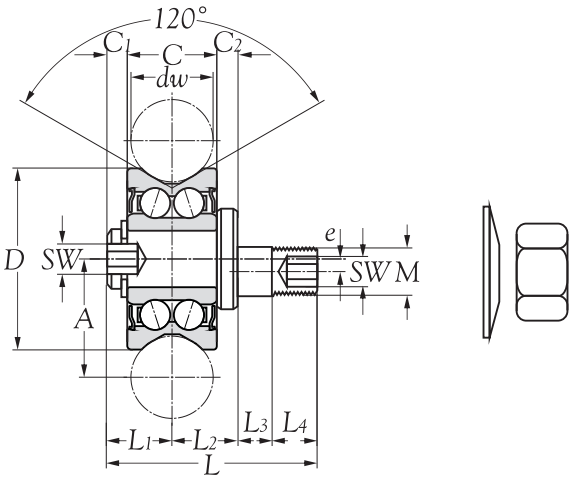

内径尺寸 dw mm	型号 concentric	型号 eccentric	基本尺寸 D	C	A	L	L_1	L_2	L_3	L_4	C_1	C_2	e	SW	M	基本额定负荷 动负荷 C N	基本额定负荷 静负荷 Co N	极限转速 grease rpm	极限转速 oil rpm	重量 kg. (approx.)
10	RV 22 C	RV 22 E	22	11	14.5	26	8.5	8	4	5.5	3	3.0	1.5	3	M 6	2,450	1,620	2,350	4,150	0.028
10	RV 30 C	RV 30 E	30	14	18.1	33	9.5	9	6	8.0	2	2.5	1.5	4	M 8	4,490	2,700	11,000	19,800	0.069
10	RV 38 C	RV 38 E	38	17	22.3	42	11.0	11	8	12.0	3	2.5	2.0	5	M 10	7,290	4,550	10,200	17,900	0.145
20	RV 41 C	RV 41 E	41	20	28.0	47	15.0	13	6	13.0	3	5.0	2.0	6	M 12	8,180	5,100	17,200	31,500	0.190
20	RV 58 C	RV 58 E	58	25	35.0	59	17.0	19	11	13.0	6	4.0	2.5	6	M 16	16,580	9,200	47,000	86,000	0.460

Remark: * Track rollers with integral studs are supplied with split washer and nut.

* The unit contamination protection is provided by side shields 2Z.

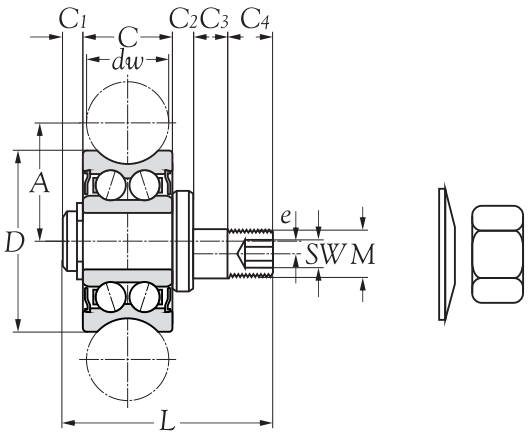

内径尺寸 dw mm	型号 concentric	型号 eccentric	基本尺寸 D	C	A	L	C1	C2	C3	C4	e	SW	M	基本额定负荷 动负荷 C N	静负荷 Co N	极限转速 grease rpm	oil rpm	重量 kg. (approx.)
			mm															
6	**RPC 17**	**RPE 17**	17	7.0	10.50	23	1.5	1.5	5	5.5	0.50	2.5	M5	1,250	850	1,250	1,700	0.015
6	**RPC 24**	**RPE 24**	24	11.0	14.00	29	3.0	2.0	6	7.0	0.50	4.0	M8	3,500	2,200	1,250	4,350	0.042
10	**RPC 35**	**RPE 35**	35	15.9	20.65	44	3.2	2.0	10	13.0	0.75	5.0	M10	8,100	8,100	4,900	9,700	0.120

Remark: * Track rollers with integral studs are supplied with split washer and nut.

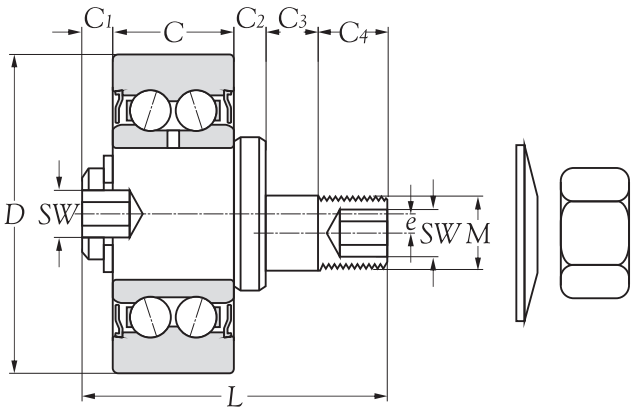

型号	基本尺寸										基本额定负荷		极限转速		Mass
											动负荷	静负荷			kg.
	D	C	L	C1	C2	C3	C4	e	SW	M	C	Co	grease	oil	(approx.)
	mm										N		rpm		
RA 35 A	35	15.9	42	2.1	5	6.0	13	1.0	5	M 12	8,100	4,900	4,900	9,700	0.150
RA 52 A	52	22.2	57	3.3	8	9.5	14	1.5	6	M 16	16,000	9,100	11,500	15,800	0.345

Remark: * Track rollers with integral studs are supplied with split washer and nut.

* The unit contamination protection is provided by side shields 2Z.

PART J

杆端轴承

Rod End

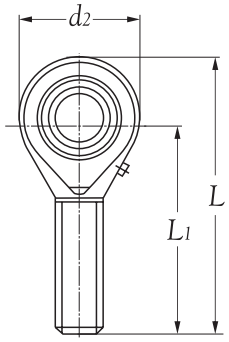

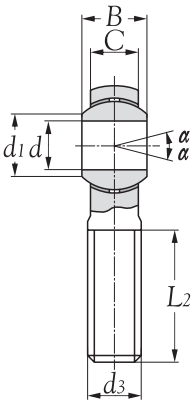

内径尺寸 d mm	型号		基本尺寸 d2	B	C1	d3	L1	L2	L	d1	α° ≈	基本额定负荷 动负荷 Cd N	静负荷 Cs N	重量 kg. (approx.)
			mm											
5	BNM5	BNML5	16	8	6.00	M5 x 0.80	33	20	41	7.7	13	3300	3900	0.0125
6	BNM6	BNML6	18	9	6.75	M6 x 1.00	36	22	45	9.0	13	4300	5300	0.0190
8	BNM8	BNML8	22	12	9.00	M8 x 1.25	42	25	53	10.4	13	6800	8500	0.0320
10	BNM10	BNML10	26	14	10.50	M10 x 1.50	48	29	61	12.9	13	10000	11000	0.0540
12	BNM12	BNML12	30	16	12.00	M12 x 1.75	54	33	69	15.4	13	13000	14000	0.0850
14	BNM14	BNML14	34	19	13.50	M14 x 2.00	60	36	77	16.9	13	17000	20000	0.1260
16	BNM16	BNML16	38	21	15.00	M16 x 2.00	66	40	85	19.4	13	21000	25000	0.1850
18	BNM18	BNML18	42	23	16.50	M18 x 1.50	72	44	93	21.9	13	26000	30000	0.2600
20	BNM20	BNML20	46	25	18.00	M20 x 1.50	78	47	101	24.4	13	31000	35000	0.3400
22	BNM22	BNML22	50	28	20.00	M22 x 1.50	84	51	109	25.8	13	38000	43000	0.4350
25	BNM25	BNML25	60	31	22.00	M24 x 2.00	94	57	124	29.6	13	47000	65000	0.6500
30	BNM30	BNML30	70	37	25.00	M30 x 2.00	110	66	145	34.8	13	63000	86000	1.0700

Note: 1) Suffix "L" means with left hand thread.

2) We could supply the above models in two sorts, one is produced by forging, the another by machining.
So, please let us know which of them is what you needed before you ordering.

3) We supply this series of rod end bearings strictly in accordance with the above specifications, any changes are on special order.

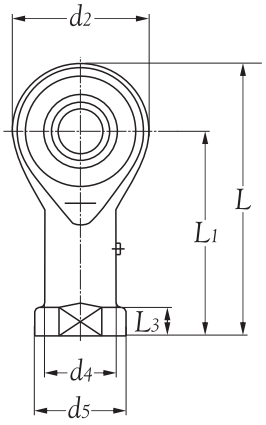

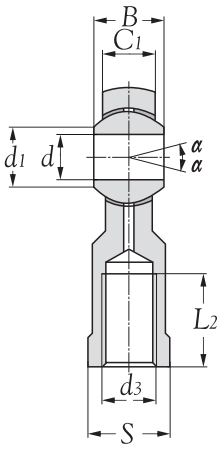

内径尺寸 d mm	型号		基本尺寸 d2	B	C1	S	d3	d4 mm	d5	L1	L2	L	L3	d1	α° ≈	基本额定负荷 动负荷 Cd N	静负荷 Cs N	重量 kg. (approx.)
5	**BNF5**	**BNFL5**	16	8	6.00	9	M5 x 0.80	9.0	11	27	14	35	4.0	7.7	13	3300	3900	0.016
6	**BNF6**	**BNFL6**	18	9	6.75	11	M6 x 1.00	10.0	13	30	14	39	5.0	9.0	13	4300	5300	0.026
8	**BNF8**	**BNFL8**	22	12	9.00	14	M8 x 1.25	12.5	16	36	17	47	5.0	10.4	13	6800	8500	0.044
10	**BNF10**	**BNFL10**	26	14	10.50	17	M10 x 1.50	15.0	19	43	21	56	6.5	12.9	13	10000	11000	0.072
10	**BNF10.1**	**BNFL10.1**	26	14	10.50	17	M10 x 1.25	15.0	19	43	21	56	6.5	12.9	13	10000	11000	0.072
12	**BNF12**	**BNFL12**	30	16	12.00	19	M12 x 1.75	17.5	22	50	24	65	6.5	15.4	13	13000	14000	0.108
12	**BNF12.1**	**BNFL12.1**	30	16	12.00	19	M12 x 1.25	17.5	22	50	24	65	6.5	15.4	13	13000	14000	0.108
14	**BNF14**	**BNFL14**	34	19	13.50	22	M14 x 2.00	20.0	25	57	27	74	8.0	16.9	13	17000	20000	0.161
16	**BNF16**	**BNFL16**	38	21	15.00	22	M16 x 2.00	22.0	27	64	33	83	8.0	19.4	13	21000	25000	0.225
16	**BNF16.1**	**BNFL16.1**	38	21	15.00	22	M16 x 1.50	22.0	27	64	33	83	8.0	19.4	13	21000	25000	0.225
18	**BNF18**	**BNFL18**	42	23	16.50	27	M18 x 1.50	25.0	31	71	36	92	10.0	21.9	13	26000	30000	0.295
20	**BNF20**	**BNFL20**	46	25	18.00	30	M20 x 1.50	27.5	34	77	40	100	10.0	24.4	13	31000	35000	0.382
22	**BNF22**	**BNFL22**	50	28	20.00	32	M22 x 1.50	30.0	37	84	43	109	12.0	25.8	13	38000	43000	0.488
25	**BNF25**	**BNFL25**	60	31	22.00	36	M24 x 2.00	33.5	42	94	48	124	12.0	29.6	13	47000	65000	0.749
30	**BNF30**	**BNFL30**	70	37	25.00	41	M30 x 2.00	40.0	50	110	56	145	15.0	34.8	13	63000	86000	1.130
30	**BNF30.1**	**BNFL30.1**	70	37	25.00	41	M27 x 2.00	40.0	50	110	56	145	15.0	34.8	13	63000	86000	1.130

Note: 1) Suffix "L" means with left hand thread.

2) We could supply the above models in two sorts, one is produced by forging, the another by machining.
So, please let us know which of them is what you needed before you ordering.

3) We supply this series of rod end bearings strictly in accordance with the above specifications, any changes are on special order.

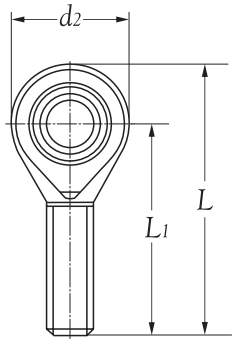

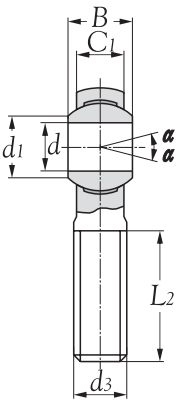

内径尺寸 d mm	型号		基本尺寸 d2	B	C1	d3	L1	L2	L	d1	α° ≈	基本额定负荷 动负荷 Cd	静负荷 Cs	重量 kg. (approx.)
			mm									N		
5	DM5	DML5	16	8	6.00	M5 x 0.80	33	20	41	7.7	13	3300	3900	0.013
6	DM6	DML6	18	9	6.75	M6 x 1.00	36	22	45	9.0	13	4300	5300	0.019
8	DM8	DML8	22	12	9.00	M8 x 1.25	42	25	53	10.4	13	6800	8500	0.032
10	DM10	DML10	26	14	10.50	M10 x 1.50	48	29	61	12.9	13	10000	11000	0.054
12	DM12	DML12	30	16	12.00	M12 x 1.75	54	33	69	15.4	13	13000	14000	0.085
14	DM14	DML14	34	19	13.50	M14 x 2.00	60	36	77	16.9	13	17000	20000	0.126
16	DM16	DML16	38	21	15.00	M16 x 2.00	66	40	85	19.4	13	21000	25000	0.185
18	DM18	DML18	42	23	16.50	M18 x 1.50	72	44	93	21.9	13	26000	30000	0.260
20	DM20	DML20	46	25	18.00	M20 x 1.50	78	47	101	24.4	13	31000	35000	0.340
22	DM22	DML22	50	28	20.00	M22 x 1.50	84	51	109	25.8	13	38000	43000	0.435
25	DM25	DML25	60	31	22.00	M24 x 2.00	94	57	124	29.6	13	47000	65000	0.650
30	DM30	DML30	70	37	25.00	M30 x 2.00	110	66	145	34.8	13	63000	86000	1.070

Note: 1) Suffix "L" means with left hand thread.

2) We could supply the above models in two sorts, one is produced by forging, the another by machining.
So, please let us know which of them is what you needed before you ordering.

3) We supply this series of rod end bearings strictly in accordance with the above specifications, any changes are on special order.

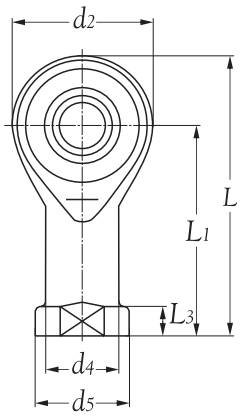

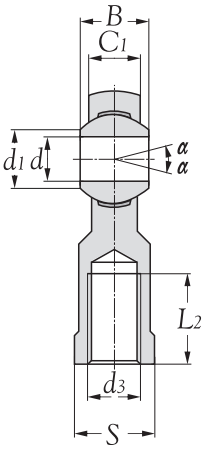

内径尺寸 d mm	型号		基本尺寸 d2	B	C1	S	d3	d4	d5	L1	L2	L	L3	d1	α° ≈	基本额定负荷 动负荷 Cd N	静负荷 Cs N	重量 kg. (approx.)
			mm															
5	DF5	DFL5	16	8	6.00	9	M5 x 0.80	9.0	11	27	14	35	4.0	7.7	13	3300	3900	0.016
6	DF6	DFL6	18	9	6.75	11	M6 x 1.00	10.0	13	30	14	39	5.0	9.0	13	4300	5300	0.026
8	DF8	DFL8	22	12	9.00	14	M8 x 1.25	12.5	16	36	17	47	5.0	10.4	13	6800	8500	0.044
10	DF10	DFL10	26	14	10.50	17	M10 x 1.50	15.0	19	43	21	56	6.5	12.9	13	10000	11000	0.072
10	DF10.1	DFL10.1	26	14	10.50	17	M10 x 1.25	15.0	19	43	21	56	6.5	12.9	13	10000	11000	0.072
12	DF12	DFL12	30	16	12.00	19	M12 x 1.75	17.5	22	50	24	65	6.5	15.4	13	13000	14000	0.108
12	DF12.1	DFL12.1	30	16	12.00	19	M12 x 1.25	17.5	22	50	24	65	6.5	15.4	13	13000	14000	0.108
14	DF14	DFL14	34	19	13.50	22	M14 x 2.00	20.0	25	57	27	74	8.0	16.9	13	17000	20000	0.161
16	DF16	DFL16	38	21	15.00	22	M16 x 2.00	22.0	27	64	33	83	8.0	19.4	13	21000	25000	0.225
16	DF16.1	DFL16.1	38	21	15.00	22	M16 x 1.50	22.0	27	64	33	83	8.0	19.4	13	21000	25000	0.225
18	DF18	DFL18	42	23	16.50	27	M18 x 1.50	25.0	31	71	36	92	10.0	21.9	13	26000	30000	0.295
20	DF20	DFL20	46	25	18.00	30	M20 x 1.50	27.5	34	77	40	100	10.0	24.4	13	31000	35000	0.382
22	DF22	DFL22	50	28	20.00	32	M22 x 1.50	30.0	37	84	43	109	12.0	25.8	13	38000	43000	0.488
25	DF25	DFL25	60	31	22.00	36	M24 x 2.00	33.5	42	94	48	124	12.0	29.6	13	47000	65000	0.749
30	DF30	DFL30	70	37	25.00	41	M30 x 2.00	40.0	50	110	56	145	15.0	34.8	13	63000	86000	1.130

Note: 1) Suffix "L" means with left hand thread.

2) We could supply the above models in two sorts, one is produced by forging, the another by machining.
So, please let us know which of them is what you needed before you ordering.

3) We supply this series of rod end bearings strictly in accordance with the above specifications, any changes are on special order.

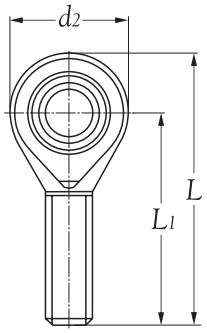

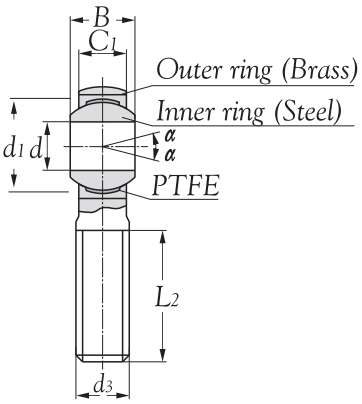

内径尺寸 d mm	型号		基本尺寸 d2	B	C1	d3	L1	L2	L	d1	α° ≈	基本额定负荷 动负荷 Cd N	静负荷 Cs N	重量 kg. (approx.)
			mm											
5	BNM5K	BNML5K	18	8	6.00	M5 x 0.80	33	19	42	11.11	13	5700	6000	0.013
6	BNM6K	BNML6K	20	9	6.75	M6 x 1.00	36	21	46	12.7	13	7200	7650	0.020
8	BNM8K	BNML8K	24	12	9.00	M8 x 1.25	42	25	54	15.875	14	11600	12900	0.038
10	BNM10K	BNML10K	28	14	10.50	M10 x 1.50	48	28	62	19.05	13	14500	18000	0.055
10	BNM10.1K	BNML10.1K	28	14	10.50	M10 x 1.25	48	28	62	19.05	13	14500	18000	0.055
12	BNM12K	BNML12K	32	16	12.00	M12 x 1.75	54	32	70	22.225	13	17000	24000	0.085
12	BNM12.1K	BNML12.1K	32	16	12.00	M12 x 1.25	54	32	70	22.225	13	17000	24000	0.085
14	BNM14K	BNML14K	36	19	13.50	M14 x 2.00	60	36	78	25.4	16	24000	31000	0.14
16	BNM16K	BNML16K	42	21	15.00	M16 x 2.00	66	37	87	28.575	15	28500	39000	0.21
16	BNM16.1K	BNML16.1K	42	21	15.00	M16 x 1.50	66	37	87	28.575	15	28500	39000	0.28
18	BNM18K	BNML18K	46	23	16.50	M18 x 1.50	72	41	94	31.75	15	42500	47500	0.28
20	BNM20K	BNML20K	50	25	18.00	M20 x 1.50	78	45	103	34.925	14	42500	57000	0.38
22	BNM22K	BNML22K	54	28	20.00	M22 x 1.50	84	48	111	38.1	15	57000	68000	0.48
25	BNM25K	BNML25K	60	31	22.00	M24 x 2.00	94	55	124	42.86	15	68000	85000	0.64
28	BNM28K	BNML28K	66	35	24.00	M27 x 2.00	103	62	136	47.63	15	86000	107000	0.80
30	BNM30K	BNML30K	70	37	25.00	M30 x 2.00	107	66	145	50.8	17	88000	114000	1.10
35	BNM35K	BNML35K	81	43	28.00	M36 x 2.00	125	85	180.5	57.15	16	-	-	1.64
40	BNM40K	BNML40K	91	49	33.00	M42 x 2.00	142	90	195.5	66.67	17	-	-	2.30
50	BNM50K	BNML50K	117	60	45.00	M48 x 2.00	160	105	243.5	82.50	12	-	-	4.80

Note: 1) Suffix "L" means with left hand thread.

2) We could supply the above models in two sorts, one is produced by forging, the another by machining.
So, please let us know which of them is what you needed before you ordering.

3) We supply this series of rod end bearings strictly in accordance with the above specifications, any changes are on special order.

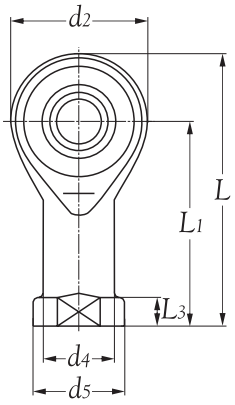

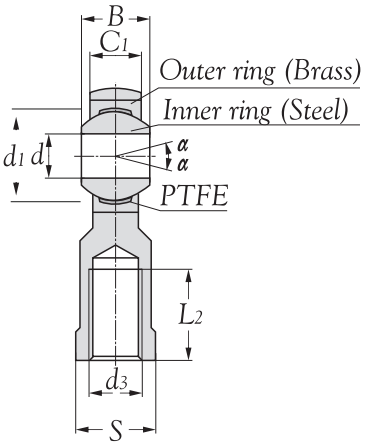

内径尺寸 d mm	型号		基本尺寸 d2	B	C1	S	d3	d4	d5	L1	L2	L	L3	d1	α° ≈	基本额定负荷 动负荷 Cd N	静负荷 Cs N	重量 kg. (approx.)
			mm															
5	BNF5K	BNFL5K	18	8	6.00	9	M5 x 0.80	8.5	11	27	10	36	4.0	11.11	13	5700	6000	0.016
6	BNF6K	BNFL6K	20	9	6.75	11	M6 x 1.00	10.0	13	30	12	40	5.0	12.7	13	7200	7650	0.022
8	BNF8K	BNFL8K	24	12	9.00	14	M8 x 1.25	12.5	16	36	16	48	5.0	15.875	14	11600	12900	0.047
10	BNF10K	BNFL10K	28	14	10.50	17	M10 x 1.50	15.0	19	43	20	57	6.5	19.05	13	14500	18000	0.077
10	BNF10.1K	BNFL10.1K	28	14	10.50	17	M10 x 1.25	15.0	19	43	20	57	6.5	19.05	13	14500	18000	0.077
12	BNF12K	BNFL12K	32	16	12.00	19	M12 x 1.75	17.5	22	50	22	66	6.5	22.225	13	17000	24000	0.100
12	BNF12.1K	BNFL12.1K	32	16	12.00	19	M12 x 1.25	17.5	22	50	22	66	6.5	22.225	13	17000	24000	0.100
14	BNF14K	BNFL14K	36	19	13.50	22	M14 x 2.00	20.0	25	57	25	75	8.0	25.4	16	24000	31000	0.160
16	BNF16K	BNFL16K	42	21	15.00	22	M16 x 2.00	22.0	27	64	28	85	8.0	28.575	15	28500	39000	0.220
16	BNF16.1K	BNFL16.1K	42	21	15.00	22	M16 x 1.50	22.0	27	64	28	85	8.0	28.575	15	28500	39000	0.220
18	BNF18K	BNFL18K	44	23	16.50	27	M18 x 1.50	25.0	31	71	32	93	10.0	31.75	15	42500	47500	0.320
20	BNF20K	BNFL20K	50	25	18.00	30	M20 x 1.50	27.5	34	77	33	102	10.0	34.925	14	42500	57000	0.420
22	BNF22K	BNFL22K	54	28	20.00	32	M22 x 1.50	30.0	38	84	37	111	12.0	38.1	15	57000	68000	0.540
25	BNF25K	BNFL25K	60	31	22.00	36	M24 x 2.00	33.5	42	94	42	124	12.0	42.86	15	68000	85000	0.720
28	BNF28K	BNFL28K	66	35	24.00	41	M27 x 2.00	37.0	46	103	51	136	14.0	47.63	15	86000	107000	0.820
30	BNF30K	BNFL30K	70	37	25.00	41	M30 x 2.00	40.0	50	110	51	145	15.0	50.8	17	88000	114000	1.100

Note: 1) Suffix "L" means with left hand thread.

2) We could supply the above models in two sorts, one is produced by forging, the another by machining.
So, please let us know which of them is what you needed before you ordering.

3) We supply this series of rod end bearings strictly in accordance with the above specifications, any changes are on special order.

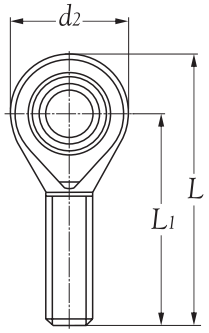

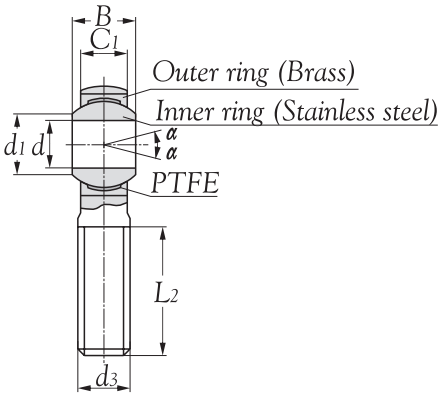

内径尺寸 d mm	型号		基本尺寸 d2	B	C1	d3	L1 mm	L2	L	d1	α° ≈	基本额定负荷 动负荷 Cd N	静负荷 Cs N	重量 kg. (approx.)
5	DMSS5	DMSSL5	16	8	6.00	M5 x 0.80	33	20	41	7.7	13	3300	3900	0.013
6	DMSS6	DMSSL6	18	9	6.75	M6 x 1.00	36	22	45	9.0	13	4300	5300	0.019
8	DMSS8	DMSSL8	22	12	9.00	M8 x 1.25	42	25	53	10.4	13	6800	8500	0.032
10	DMSS10	DMSSL10	26	14	10.50	M10 x 1.50	48	29	61	12.9	13	10000	11000	0.054
12	DMSS12	DMSSL12	30	16	12.00	M12 x 1.75	54	33	69	15.4	13	13000	14000	0.085
14	DMSS14	DMSSL14	34	19	13.50	M14 x 2.00	60	36	77	16.9	13	17000	20000	0.126
16	DMSS16	DMSSL16	38	21	15.00	M16 x 2.00	66	40	85	19.4	13	21000	25000	0.185
18	DMSS18	DMSSL18	42	23	16.50	M18 x 1.50	72	44	93	21.9	13	26000	30000	0.260
20	DMSS20	DMSSL20	46	25	18.00	M20 x 1.50	78	47	101	24.4	13	31000	35000	0.340
22	DMSS22	DMSSL22	50	28	20.00	M22 x 1.50	84	51	109	25.8	13	38000	43000	0.435
25	DMSS25	DMSSL25	60	31	22.00	M24 x 2.00	94	57	124	29.6	13	47000	65000	0.650
30	DMSS30	DMSSL30	70	37	25.00	M30 x 2.00	110	66	145	34.8	13	63000	86000	1.070

Note: 1) Suffix "L" means with left hand thread.

2) We could supply the above models in two sorts, one is produced by forging, the another by machining.
So, please let us know which of them is what you needed before you ordering.

3) We supply this series of rod end bearings strictly in accordance with the above specifications, any changes are on special order.

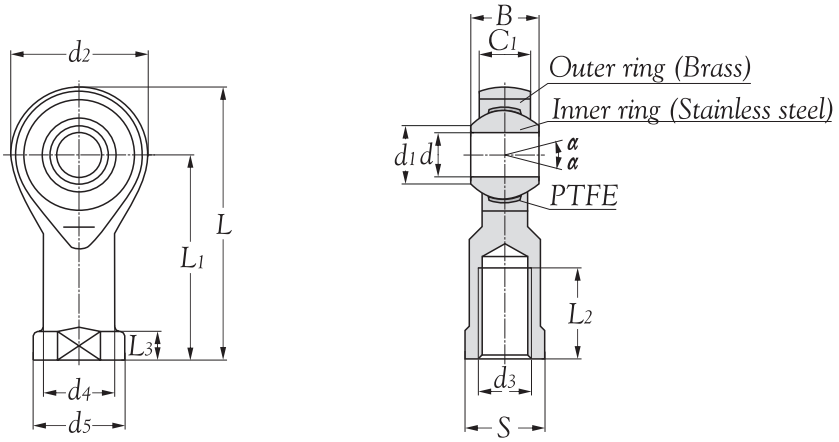

内径尺寸 d mm	型号		基本尺寸 d2	B	C1	S	d3	d4	d5	L1	L2	L	L3	d1	α° ≈	基本额定负荷 动负荷 Cd N	静负荷 Cs N	重量 kg. (approx.)
			mm															
5	DFSS5	DFSSL5	16	8	6.00	9	M5 x 0.80	9.0	11	27	14	35	4.0	7.7	13	3300	3900	0.016
6	DFSS6	DFSSL6	18	9	6.75	11	M6 x 1.00	10.0	13	30	14	39	5.0	9.0	13	4300	5300	0.026
8	DFSS8	DFSSL8	22	12	9.00	14	M8 x 1.25	12.5	16	36	17	47	5.0	10.4	13	6800	8500	0.044
10	DFSS10	DFSSL10	26	14	10.50	17	M10 x 1.50	15.0	19	43	21	56	6.5	12.9	13	10000	11000	0.072
10	DFSS10.1	DFSSL10.1	26	14	10.50	17	M10 x 1.25	15.0	19	43	21	56	6.5	12.9	13	10000	11000	0.072
12	DFSS12	DFSSL12	30	16	12.00	19	M12 x 1.75	17.5	22	50	24	65	6.5	15.4	13	13000	14000	0.108
12	DFSS12.1	DFSSL12.1	30	16	12.00	19	M12 x 1.25	17.5	22	50	24	65	6.5	15.4	13	13000	14000	0.108
14	DFSS14	DFSSL14	34	19	13.50	22	M14 x 2.00	20.0	25	57	27	74	8.0	16.9	13	17000	20000	0.161
16	DFSS16	DFSSL16	38	21	15.00	22	M16 x 2.00	22.0	27	64	33	83	8.0	19.4	13	21000	25000	0.225
16	DFSS16.1	DFSSL16.1	38	21	15.00	22	M16 x 1.50	22.0	27	64	33	83	8.0	19.4	13	21000	25000	0.225
18	DFSS18	DFSSL18	42	23	16.50	27	M18 x 1.50	25.0	31	71	36	92	10.0	21.9	13	26000	30000	0.295
20	DFSS20	DFSSL20	46	25	18.00	30	M20 x 1.50	27.5	34	77	40	100	10.0	24.4	13	31000	35000	0.382
22	DFSS22	DFSSL22	50	28	20.00	32	M22 x 1.50	30.0	37	84	43	109	12.0	25.8	13	38000	43000	0.488
25	DFSS25	DFSSL25	60	31	22.00	36	M24 x 2.00	33.5	42	94	48	124	12.0	29.6	13	47000	65000	0.749
30	DFSS30	DFSSL30	70	37	25.00	41	M30 x 2.00	40.0	50	110	56	145	15.0	34.8	13	63000	86000	1.130

Note: 1) Suffix "L" means with left hand thread.

2) We could supply the above models in two sorts, one is produced by forging, the another by machining. So, please let us know which of them is what you needed before you ordering.

3) We supply this series of rod end bearings strictly in accordance with the above specifications, any changes are on special order.

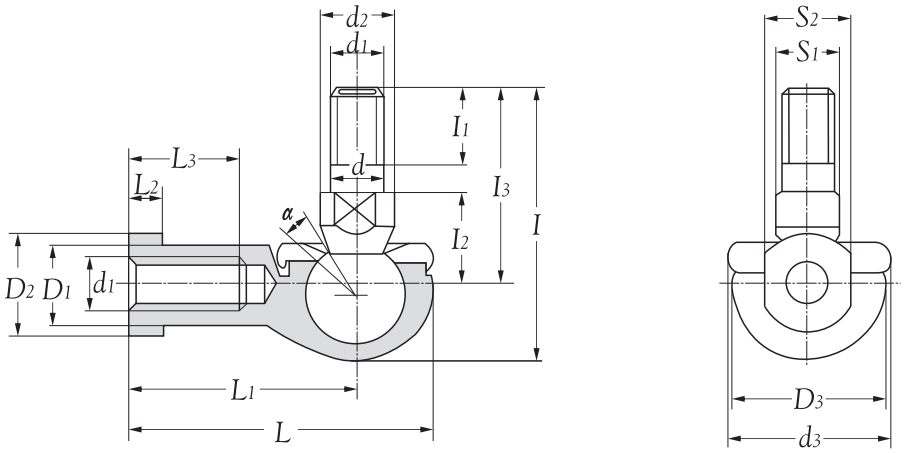

内径尺寸 d mm	型号	基本尺寸 d1	d2 min	d3 max	I min	I1 max	I2	I3 max	S1	L max	L1	L2 max	L3 min	D1 max	D2 max	D3 max	S2	α° ≈	基本额定负荷 Cd N	重量 kg. (approx.)
5	RBL5	M5x0.80	9	19	29.0	8	10.0	21	7	35	27	4.0	14	9.0	11	16	9	25	2200	0.026
6	RBL6	M6x1.00	10	20	35.5	11	11.0	26	8	40	30	5.0	14	10.0	13	19	11	25	3500	0.039
8	RBL8	M8x1.25	12	24	42.5	12	14.0	31	10	48	36	5.0	17	12.5	16	23	14	25	6600	0.068
10	RBL10	M10x1.25	14	30	50.5	15	17.0	37	11	57	43	6.5	21	15.0	19	27	17	25	10000	0.112
10	RBL10B	M10x1.50	14	30	56.5	21	17.0	43	11	57	43	6.5	21	15.0	19	27	17	25	10000	0.112
12	RBL12	M12x1.25	17	32	57.5	17	19.0	42	15	66	50	6.5	25	17.5	22	31	19	25	16000	0.164
12	RBL12B	M12x1.75	17	32	64.5	24	19.0	49	15	66	50	6.5	25	17.5	22	31	19	25	16000	0.164
14	RBL14	M14x1.50	19	38	73.5	22	21.5	56	17	75	57	8.0	26	20.0	25	35	22	25	19000	0.254
14	RBL14B	M14x2.00	19	38	79.5	28	21.5	62	17	75	57	8.0	26	20.0	25	35	22	25	19000	0.254
16	RBL16	M16x1.50	22	44	79.5	23	23.5	60	19	84	64	8.0	32	22.0	27	39	22	20	26000	0.336
16	RBL16B	M16x2.00	22	44	85.5	29	23.5	66	19	84	64	8.0	32	22.0	27	39	22	20	26000	0.336
18	RBL18	M18x1.50	23	45	90.0	25	26.5	68	20	93	71	10.0	34	25.0	31	44	27	20	33000	0.464
20	RBL20	M20x1.50	27	50	90.0	25	27.0	68	24	99	77	10.0	35	27.5	34	44	30	20	45000	0.538
22	RBL22	M22x1.50	27	52	95.0	26	28.0	70	24	100	84	12.0	41	30.0	37	50	32	16	48000	0.713

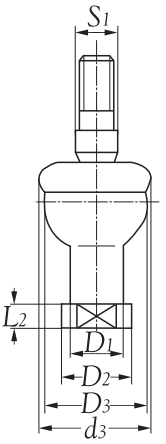

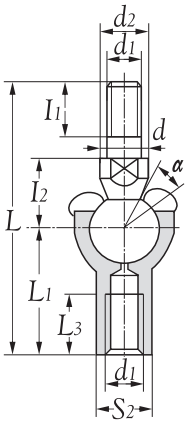

内径尺寸 d mm	型号	基本尺寸 d1	d2 min	d3 max	I1 min	I2	S1	L max	L1	L2 max	L3 min	D1 max	D2 max	D3 max	S2	α° ≈	基本额定负荷 Cd N	重量 kg. (approx.)
5	**RBI5**	M5 x 0.80	9	20	8	11.0	7	46.0	24	4.0	12	9.0	11	17	9	15.0	2800	0.025
6	**RBI6**	M6 x 1.00	10	20	11	12.2	8	55.2	28	5.0	15	10.0	13	20	11	15.0	3700	0.041
8	**RBI8**	M8 x 1.25	12	24	12	16.0	10	65.0	32	5.0	16	12.5	16	24	14	15.0	5800	0.075
10	**RBI10**	M10 x 1.25	14	30	15	19.5	11	74.5	35	6.5	18	15.0	19	28	17	15.0	8400	0.120
10	**RBI10B**	M10 x 1.50	14	30	21	19.5	11	80.5	35	6.5	18	15.0	19	28	17	15.0	8400	0.120
12	**RBI12**	M12 x 1.25	17	32	17	21.0	15	84.0	40	6.5	20	17.5	22	32	19	15.0	11000	0.180
12	**RBI12B**	M12 x 1.75	17	32	24	21.0	15	91.0	40	6.5	20	17.5	22	32	19	15.0	11000	0.180
14	**RBI14**	M14 x 1.50	19	38	22	23.5	17	103.0	45	8.0	25	20.0	25	36	22	11.0	15000	0.270
14	**RBI14B**	M14 x 2.00	19	38	28	23.5	17	109.0	45	8.0	25	20.0	25	36	22	11.0	15000	0.270
16	**RBI16**	M16 x 1.50	22	44	23	25.5	19	112.0	50	8.0	27	22.0	27	40	22	11.0	15000	0.360
16	**RBI16B**	M16 x 2.00	22	44	29	25.5	19	118.0	50	8.0	27	22.0	27	40	22	11.0	15000	0.360
18	**RBI18**	M18 x 1.50	23	45	25	31.0	20	130.0	58	10.0	31	25.0	31	45	27	11.0	19000	0.540
20	**RBI20**	M20 x 1.50	27	50	25	29.0	24	133.0	63	10.0	34	27.5	34	45	30	7.5	19000	0.570
22	**RBI22**	M22 x 1.50	27	52	26	33.0	24	145.0	70	12.0	37	30.0	37	50	32	7.5	23000	0.760

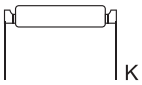
K

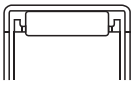
HK

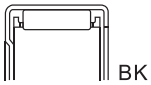
BK

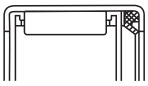
HK..L

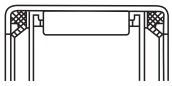
HK..LL

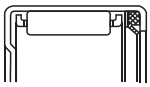
BK..L

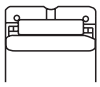
NA48
NA49
NA59

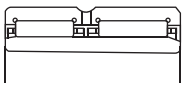
NA69


NA49..L
RNA49..L

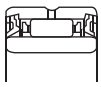
NA49..LL
RNA49..LL

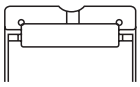
RNA 48
RNA 49
RNA 59
NK

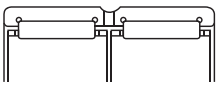
RNA69


NKI

AXK11

AS

WS


GS


LS


K 811
K 812

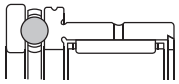
NKX
NKX..Z

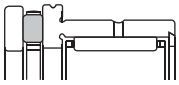
NKXR
NKXR..Z

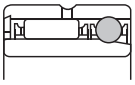
NKIA 59

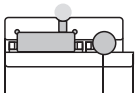
NKIB 59


NATR


NATR..LL


NATV


NATV..LL

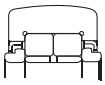
NUTR

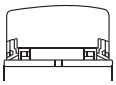
NA22..LL


RNA 22..LL

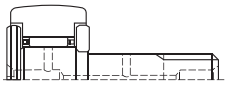
KR
KR..LL

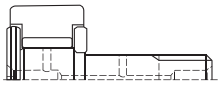
KRV
KRV..LL

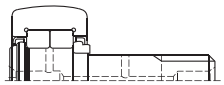
NUKR

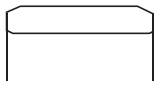
IR

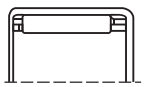
HF

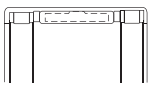
HFL

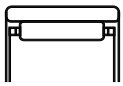
RNAO

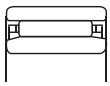
NAO

UCP 205-16

内径尺寸

内径尺寸 / 英制

系列

2	标准系列
X	中等负荷系列
3	重负荷系列

轴承型号

SB 200	窄内圈顶丝型
UC 200	宽内圈顶丝型(标准型)
SA 200	窄内圈偏心套型
UEL 200	宽内圈偏心套型
UK 200	带紧定套型
UC X00	宽内圈顶丝型(中负荷)
UC 300	宽内圈顶丝型(重负荷)
SS UC 200	宽内圈顶丝型(不锈钢)

轴承座型号

PP 200	立式冲压座
AK 200	立式铸铁座
P 200	立式铸铁座
PA 200	立式铸铁座
PH 200	立式铸铁座
P X00	立式铸铁座
P 300	立式铸铁座
FS 200	法兰铸铁座
F 200	法兰铸铁座
F X00	法兰铸铁座
F 300	法兰铸铁座
PFL 200	两孔法兰冲压座
FT 200	两孔法兰铸铁座
FL 200	两孔法兰铸铁座
FA 200	可调法兰铸铁座
FB 200	叁孔法兰铸铁座
FL X00	两孔法兰铸铁座
FL 300	两孔法兰铸铁座
PF 200	圆形法兰冲压座
FC 200	圆形法兰铸铁座
HA 200	悬挂式铸铁座
C 200	圆柱外圈铸铁座
ST 200	滑槽推拉型铸铁座
T 200	滑槽推拉型铸铁座
PL-P 200	立式塑胶座
PL-PA 200	立式塑胶座
PL-F 200	法兰塑胶座
PL-FL 200	两孔法兰塑胶座
PL-FC 200	法兰定位塑胶座
PL-T 200	滑槽推拉型塑胶座
SS P 200	立式不锈钢座
SS PA 200	立式不锈钢座
SS F 200	法兰不锈钢座
SS FL 200	两孔法兰不锈钢座
SS FB 200	叁孔法兰不锈钢座
SS FC 200	圆形法兰不锈钢座
SS T 200	滑槽推拉型不锈钢座

Inch Practional	Inch Decimal	0	1	2	3	4	5	6	7	8	9
	0		25.400	50.800	76.200	101.600	127.000	152.400	177.800	203.200	228.600
1/64	.015625	0.397	25.797	50.197	76.597	101.997	152.797	152.797	178.197	203.597	228.997
1/32	.031250	0.794	26.194	51.594	76.994	102.394	153.194	153.194	178.594	203.994	229.394
3/64	.046875	1.191	26.591	51.991	77.391	102.791	153.591	153.591	178.991	204.391	229.791
1/16	.062500	1.588	26.988	52.388	77.788	103.188	153.988	153.988	179.388	204.788	230.188
5/64	.078125	1.984	27.384	52.784	78.184	103.584	154.384	154.384	179.784	205.184	230.584
3/32	.093750	2.381	27.781	53.181	78.581	103.981	154.781	154.781	180.181	205.581	230.981
7/64	.109375	2.778	28.178	53.578	78.978	104.378	155.178	155.178	180.578	205.978	231.378
1/8	.125000	3.175	28.575	53.975	79.375	104.775	155.575	155.575	180.975	206.375	231.775
9/64	.140625	3.572	28.975	54.372	79.772	105.172	130.572	155.972	181.372	206.772	232.172
5/32	.156250	3.969	29.369	54.769	80.169	105.569	130.969	156.369	181.769	207.169	232.569
11/64	.171875	4.366	29.766	55.166	80.566	105.966	131.366	156.766	182.166	207.566	232.966
3/16	.187500	4.762	30.162	55.562	80.962	106.362	131.762	157.162	182.562	207.962	233.362
13/64	.203125	5.159	30.559	55.959	81.359	106.759	132.159	157.559	182.959	208.359	233.759
7/32	.218750	5.556	30.956	56.356	81.756	107.156	132.556	157.956	183.356	208.756	234.156
15/64	.234375	5.953	31.353	56.753	82.153	107.553	132.953	158.353	183.753	209.153	234.553
1/4	.250000	6.350	31.750	57.150	82.550	107.950	133.350	158.750	184.150	209.550	234.950
17/64	.265625	6.747	32.147	57.547	82.947	108.347	133.747	159.147	184.547	209.947	235.347
9/32	.281250	7.144	32.544	57.944	83.344	108.744	134.144	159.544	184.944	210.334	235.744
19/64	.296875	7.541	32.941	58.341	83.741	109.141	134.541	159.941	185.341	210.741	236.141
5/16	.312500	7.938	33.338	58.738	84.138	109.538	134.938	160.338	185.738	211.138	236.538
21/64	.328125	8.334	33.734	59.134	84.534	109.934	135.334	160.734	186.134	211.534	236.934
11/32	.343750	8.731	34.131	59.531	84.931	110.331	135.731	161.131	186.531	211.931	237.331
23/64	.359375	9.128	34.528	59.928	85.328	110.728	136.128	161.528	186.928	212.328	237.728
3/8	.375000	9.525	34.925	60.325	85.725	111.125	136.525	161.925	187.325	212.725	238.125
25/64	.390625	9.922	35.322	60.722	86.122	111.522	136.922	162.322	187.722	213.122	238.522
13/32	.406250	10.319	35.719	61.119	86.519	111.919	137.319	162.719	188.119	213.519	238.919
27/64	.421875	10.716	36.116	61.516	86.916	112.316	137.716	163.116	188.516	213.916	239.316
7/16	.437500	11.112	36.502	61.912	87.312	112.712	138.112	163.512	188.912	214.312	239.712
29/64	.453125	11.509	36.909	62.309	87.709	113.109	138.509	163.909	189.309	214.709	240.109
15/32	.468750	11.906	37.306	62.706	88.106	113.506	138.906	164.306	189.706	215.106	240.506
31/64	.484375	12.303	37.703	60.103	88.503	113.903	139.303	164.703	190.103	215.503	240.903
1/2	.500000	12.700	38.100	63.500	88.900	114.300	139.700	165.100	190.500	215.900	241.300
33/64	.515625	13.097	38.497	63.897	89.297	114.697	140.097	165.497	190.897	216.297	241.697
17/32	.531250	13.494	38.894	64.294	89.694	115.094	140.494	165.894	191.294	216.694	242.094
35/64	.546875	13.891	39.291	64.691	90.091	115.491	140.891	166.291	191.691	217.091	242.491
9/16	.562500	14.288	39.688	65.088	90.488	115.888	141.288	166.688	192.088	217.488	242.888
37/64	.578125	14.684	40.084	65.484	90.884	116.284	141.684	167.084	192.484	217.884	243.284
19/32	.593750	15.081	40.481	65.881	91.281	116.681	142.081	167.481	192.881	218.281	243.681
39/64	.609375	15.478	40.878	66.278	91.678	117.078	142.478	167.878	193.278	218.678	244.078
5/8	.625000	15.875	41.275	66.675	92.075	117.475	142.875	168.275	193.675	219.075	244.475
41/64	.640625	16.272	41.672	67.072	92.472	117.872	143.272	168.672	194.072	219.472	244.872
21/32	.656250	16.669	42.069	67.469	92.869	118.269	143.669	169.069	194.469	219.869	245.269
43/64	.671875	17.066	42.466	67.866	93.266	118.666	144.066	169.466	194.866	220.266	245.666
11/16	.687500	17.462	42.862	68.262	93.662	119.062	144.462	169.862	195.262	220.662	246.062
45/64	.703125	17.859	43.259	68.659	94.059	119.459	144.859	170.259	195.659	221.059	246.459
23/32	.718750	18.256	43.656	69.056	94.456	119.856	145.256	170.656	196.056	221.456	246.856
47/64	.734375	18.653	44.053	69.453	94.853	120.253	145.653	171.053	196.453	221.853	247.253
3/4	.750000	19.050	44.450	69.850	95.250	120.650	146.050	171.450	196.850	222.250	247.650
49/64	.765625	19.447	44.847	70.247	95.647	121.047	146.447	171.847	197.247	222.647	248.047
25/32	.781250	19.844	45.244	70.644	96.044	121.444	146.844	172.244	197.644	223.044	248.444
51/64	.796875	20.241	45.244	71.041	96.441	121.841	147.241	172.641	198.041	223.441	248.841
13/16	.812500	20.638	46.038	71.438	96.838	122.238	147.638	173.038	198.438	223.838	249.238
53/64	.828125	21.034	46.434	71.834	97.234	122.634	148.034	173.434	198.834	224.234	249.634
27/32	.843750	21.431	46.831	72.231	97.631	123.031	148.431	173.831	199.231	224.631	250.031
55/64	.859375	20.828	47.228	72.628	98.028	123.428	148.828	173.228	199.628	225.028	250.428
7/8	.875000	22.225	47.675	73.025	98.425	123.825	149.225	174.625	200.025	225.425	250.825
57/64	.890625	22.622	48.022	73.422	98.822	124.222	149.622	175.022	200.422	225.822	251.222
29/32	.906250	23.019	48.419	73.819	99.219	124.619	150.019	175.419	200.819	226.219	251.619
59/64	.921875	23.416	48.816	74.216	99.616	125.016	150.416	175.816	201.216	226.616	252.016
15/16	.937500	23.812	49.212	74.612	100.012	125.412	150.812	176.212	201.612	227.012	252.412
61/64	.953125	24.209	49.609	75.009	100.409	125.809	151.209	176.609	202.009	227.409	252.809
31/32	.968750	24.606	50.006	75.406	100.806	126.206	151.606	177.006	202.406	227.806	253.206
63/64	.984375	25.003	50.403	75.803	101.203	126.603	152.003	177.403	202.803	228.203	253.603

CROMSTEEL

Hardness conversion table

Rockwell C- Vickers hardeness Brinell hardeness HB Scale hardness

HRC (Load: 150kg)	HV	Standard Ball
68	940	-
67	900	-
66	865	-
65	832	-
64	800	-
63	772	-
62	746	-
61	720	-
60	697	-
59	674	-
58	653	-
57	633	-
56	613	-
55	595	-
54	577	-
53	560	-
52	544	500
51	528	487
50	513	475
49	498	464
48	484	451
47	471	442
46	458	432
45	446	421
44	434	409
43	423	400
42	412	390
41	402	381
40	392	371
39	382	362
38	372	353
37	363	344
36	354	336
35	345	327
34	336	319
33	327	311
32	318	301
31	310	294
30	302	286
29	294	279
28	286	271
27	279	264
26	272	258
25	266	253
24	260	247
23	254	243
22	248	237
21	243	231
20	238	226
(18)	230	219
(16)	222	212
(14)	213	203
(12)	204	194
(8)	188	179
(6)	180	171
(4)	173	165
(2)	166	158
(0)	160	152

Deviation of Shaft Diameter

Diameter Classification mm	f6		f7		g6		h5		h6		h7		h8		h9		h10		j6		k5		k6		m5		m6		n5		n6	
Over or Less	up	lo	up	lo	up	lo	up	lo	up	lo	up	lo	up	lo	up	lo	up	lo	up	lo	up	lo	up	lo	up	lo	up	lo	up	lo	up	lo
3 6	-10	-18	-10	-22	-4	-12	0	-5	0	-8	0	-12	0	-18	0	-30	0	-48	+6	-2	+6	+1	+9	+1	+9	+4	+12	+4	+13	+8	+16	+8
6 10	-13	-22	-13	-28	-5	-14	0	-6	0	-9	0	-15	0	-22	0	-36	0	-58	+7	-2	+7	+1	+10	+1	+12	+6	+15	+6	+16	+10	+19	+10
10 14	-16	-27	-16	-34	-6	-17	0	-8	0	-11	0	-18	0	-27	0	-43	0	-70	+8	-3	+9	+1	+12	+1	+15	+7	+18	+7	+20	+12	+23	+12
14 18	-16	-27	-16	-34	-6	-17	0	-8	0	-11	0	-18	0	-27	0	-43	0	-70	+8	-3	+9	+1	+12	+1	+15	+7	+18	+7	+20	+12	+23	+12
18 24	-20	-33	-20	-41	-7	-20	0	-9	0	-13	0	-21	0	-33	0	-52	0	-84	+9	-4	+11	+2	+15	+2	+17	+8	+21	+8	+24	+15	+28	+15
24 30	-20	-33	-20	-41	-7	-20	0	-9	0	-13	0	-21	0	-33	0	-52	0	-84	+9	-4	+11	+2	+15	+2	+17	+8	+21	+8	+24	+15	+28	+15
30 40	-25	-41	-25	-50	-9	-25	0	-11	0	-16	0	-25	0	-39	0	-62	0	-100	+11	-5	+13	+2	+18	+2	+20	+9	+25	+9	+28	+17	+33	+17
40 50	-25	-41	-25	-50	-9	-25	0	-11	0	-16	0	-25	0	-39	0	-62	0	-100	+11	-5	+13	+2	+18	+2	+20	+9	+25	+9	+28	+17	+33	+17
50 65	-30	-49	-30	-60	-10	-29	0	-13	0	-19	0	-30	0	-46	0	-74	0	-120	+12	-7	+15	+2	+21	+2	+24	+11	+30	+11	+33	+20	+39	+20
65 80	-30	-49	-30	-60	-10	-29	0	-13	0	-19	0	-30	0	-46	0	-74	0	-120	+12	-7	+15	+2	+21	+2	+24	+11	+30	+11	+33	+20	+39	+20
80 100	-36	-58	-36	-71	-12	-34	0	-15	0	-22	0	-35	0	-54	0	-87	0	-140	+13	-9	+18	+3	+25	+3	+28	+13	+35	+13	+38	+23	+45	+23
100 120	-36	-58	-36	-71	-12	-34	0	-15	0	-22	0	-35	0	-54	0	-87	0	-140	+13	-9	+18	+3	+25	+3	+28	+13	+35	+13	+38	+23	+45	+23
120 140	-43	-68	-43	-83	-14	-39	0	-18	0	-25	0	-40	0	-63	0	-100	0	-160	+14	-11	+21	+3	+28	+3	+33	+15	+40	+15	+45	+27	+52	+27
140 160	-43	-68	-43	-83	-14	-39	0	-18	0	-25	0	-40	0	-63	0	-100	0	-160	+14	-11	+21	+3	+28	+3	+33	+15	+40	+15	+45	+27	+52	+27

直线导轨对照表

CROMSTEEL

■ 直线导轨系列产品，各品牌厂商都遵循一套独立的企业标准进行研发和批量生产。从使用厂家的角度，不同品牌产品之间的互换非常困难。而基于品质成本与交货期的原因，用家对互换性的考量工作不可避免。

■ 钢士达公司专注于直线运动机械零部件的使用，工程部持续钻研直线导轨的互换性问题，以满足客户需求。在品牌对照中，安装尺寸，标准载荷，精度和可靠性，都是我们考量的因素。

	STAF	THK	STAR	THOMSON	THOMSON	SCHNEEBERGER	IKO
高组装 链带型	BGCH-BN	SHS...R	-	-	-	-	-
	BGCH-BL	SHS...LR	-	-	-	-	-
	BGCH-BE	-	-	-	-	-	-
高组装 非链带型	BGXH-BN	HSR...R	1621	AG...EE, T	511-E	BMC	LWHD...B
	BGXH-BL	HSR...LR	1624	-	511-F	BMD	LWHDG
	BGXH-BE	-	-	-	-	-	-
高组装 链带型 有法兰	BGCH-FN	SHS...C	-	-	-	-	-
	BGCH-FL	SHS...LC	-	-	-	-	-
	BGCH-FE	-	-	-	-	-	-
高组装 非链带型 有法兰	BGXH-FN	HSR...B,CB	1651	AG...AA or AT...A	511-A	-	LWH...B
	BGXH-FL	HSR...LB,HB	1653	AG...BA	511-B	-	LWHG
	BGXH-FE	-	-	-	-	-	-
低组装 链带型	BGCS-BS	SSR...XV	-	-	-	-	-
	BGCS-BN	SSR-XW	-	-	-	-	-
	BGCS-BL	SHS-V	-	-	-	-	-
	BGCS-BE	SHS-LV	-	-	-	-	-
低组装 非链带型	BGXS-BS	SR...V	1666	-	-	-	LWESC
	BGXS-BN	SR...W	1622/1694	AT...F/AG...CE	-	-	LWES
	BGXS-BL	-	-	-	-	-	-
	BGXS-BE	-	-	-	-	-	-
低组装 链带型 有法兰	BGCS-FS	-	-	-	-	-	-
	BGCS-FN	SSR-XTB	-	-	-	-	LWEC
低组装 非链带型 有法兰	BGXS-FS	SR...SB	-	-	-	-	LWE
	BGXS-FN	SR...TB	-	AT...G	-	-	-

	STAF	NSK	INA	NB	AMT	ABBA	HIWIN
高组装 链带型	BGCH-BN	-	-	-	-	BCH-B	-
	BGCH-BL	-	-	-	-	BCH-BL	-
	BGCH-BE	-	-	-	-	-	-
高组装 非链带型	BGXH-BN	LH...AN	KUSE...H/KUVE...H	-	MSA-S	BRH-B	HGH-CA
	BGXH-BL	LH...BN	KUVE...HL	-	MSA-LS	BRH-BL	HGH-HA
	BGXH-BE	-	-	-	-	-	-
高组装 链带型 有法兰	BGCH-FN	-	-	-	-	BCH-A	-
	BGCH-FL	-	-	-	-	BCH-AL	-
	BGCH-FE	-	-	-	-	-	-
高组装 非链带型 有法兰	BGXH-FN	LH...FL	-	-	MSA-A	BRH-A	HGW-CB
	BGXH-FL	LH...HL	KUSE...L	-	MSA-LA	BRH-AL	HGW-HB
	BGXH-FE	-	-	-	-	-	-
低组装 链带型	BGCS-BS	-	-	-	-	BCS-BS	-
	BGCS-BN	-	-	-	-	BCS-B	-
	BGCS-BL	-	-	-	-	BCS-BL	-
	BGCS-BE	-	-	-	-	-	-
低组装 非链带型	BGXS-BS	LS...CL	-	SGL...F	MSB-TS	BRS-BS	EGH-SA
	BGXS-BN	LS...AL	-	SGL...TF	MSB-E	BRS-B	EGH-CA
	BGXS-BL	-	-	-	-	BRS-BL	-
	BGXS-BE	-	-	-	-	-	-
低组装 链带型 有法兰	BGCS-FS	-	-	-	-	BCS-AS	-
	BGCS-FN	LS...KL	-	SGL...E	-	BCS-A	-
低组装 非链带型 有法兰	BGXS-FS	LS...FL	-	SGL...TE	MSB-TE	BRS-AS	EGW-SB
	BGXS-FN	-	-	-	MSB-E	BRS-A	EGW-CB

以上的品牌对照，仅供参考；进一步的产品分析对照，请接洽钢士达公司工程部。

CROMSTEEL®

钢士达

www.cromsteel.com.cn

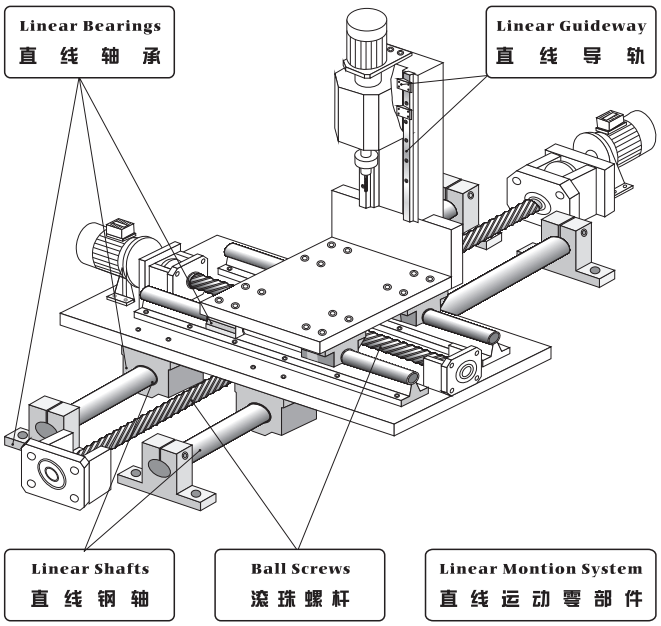

意大利菲亚达集团

www.cromsteel.ro

www.faitinternational.com

东莞市钢士达机械有限公司

Cromsteel (DongGuan) Machinery Co.,Ltd.

Tel: 0769-83523235 Fax: 0769-83523236

E-mail: Cromsteelshaft@163.com